1st EDITION

CATALOGUE 2007 - 2008

FANTON

CABLES AND ELECTRICAL COMPONENTS



AMBRA90 CAVI

SPECIAL CABLES

FANTON

CABLES AND ELECTRICAL COMPONENTS

www.fanton.com
e-mail: export@fanton.com

Fanton Spa
Viale dell'Industria 8/10
35026 Conselve (Padova) Italy
Ph. +39 049/95.97.911
Fax +39 049/95.97.976



THE POWER *of values*

Working day by day towards timeless quality.

Developing cables with greater performance, studying new insulation methods, testing increasingly efficient shielding, in our quest to achieve absolute quality: it is important to know our work contributes to improving the work of others.

It is important for the development of an industrial organisation in search of suitable values to support it new globalisation and quality initiatives. It is important for the taking on of responsibility to guarantee products which will have to prove their technological value for years to come. It is important for the expansion and consolidation of a continual improvement process.

We are dedicating the work we have put into this catalogue to all our customers and staff... from those on the factory floor to our travelling salespeople, our designers and installers: it is a sign of our progress and daily accomplishments, which thanks to our dedication allow millions of people around the world to live in communication with one another.

Renzo Fanton



INDEX

SATV COAXIAL CABLES 3

RG RADIO FREQUENCY COAXIAL CABLES 7

SECURITY CABLES 11

AUDIO CABLES 15

FLEXIBLE CABLES 17

DATA TRANSMISSION CABLES 23

ELECTRONIC CABLES 33

FIELDBUS SYSTEM CABLES 37

LAN CABLES 47

SUBMERSIBLE PUMP CABLES 51

AUTOMOTIVE CABLES 53

SENSOR CABLES 57



AMBRA90 A90 CAVI

SPECIAL CABLES DIVISION

SATV COAXIAL CABLES

- Profexional series
- Standard series

Profexional Series









Code	A21.210 SAT 0.75 PRO	A21.250 SKYSAT PRO	A21.260 SKYSAT TRIPLEX
MANUFACTURING SPECIFICATIONS			
Inner cond.	Cu	Cu	Cu
diam. (mm)	0.75	1.13	1.13
Dielectric	PEG	PEG	PEG
diam. (mm)	3.50	4.80	4.80
Shield:			
Tape	Al/Pes/Al	Al/Pes/Al	Al/Pes/Al
Coverage	100%	100%	100%
Braid	CuSn	CuSn	CuSn
Coverage	82%	78%	78%
Tape	Pes	Pes	Al/Pes/Al
Coverage	-	-	100%
Sheath	PVC	PVC	PVC
Colour	WHITE	WHITE	WHITE
diam. (mm)	5.00	6.70	6.70
ELECTRICAL SPECIFICATIONS			
Impedance (Ω)	75±3	75±3	75±3
Capacity (pF/m)	55±2	55±2	55±2
Shielding efficiency (dB)	>90	>90	>95
Velocity ratio (%)	85	85	85
S.R.L. MHz (dB)			
30÷470	>28	>30	>30
470÷862	>26	>30	>30
862÷2150	>24	>28	>28
ATTENUATION			
MHz (dB/100 m)			
50	5.60	3.90	3.00
200	11.20	8.10	7.40
470	17.80	13.20	12.60
862	24.70	18.40	18.10
1000	26.80	20.00	19.90
1350	31.60	24.20	23.70
1750	36.30	27.50	27.70
2150	40.80	30.50	30.30
Min. bending radius			
(mm)	50	70	70

STANDARD PACKAGING

Code final no.	Manufacturing	A21.21_	A21.25_	A21.26_
0	in stock	150 m x 5	100 m x 5	100 m x 5
1	in stock	150 m	100 m	100 m
7	UPON REQUEST	1000 m	1000 m	1000 m

UPON REQUEST:
- BLACK PE sheath for external use
- WHITE LSZH sheath

Standard Series

Code	A21.220 MINISAT	A21.230 SAT 0.75	A21.240 SAT 1.00	A21.010 SKYSAT
MANUFACTURING SPECIFICATIONS				
Inner cond.	Cu	Cu	Cu	Cu
diam. (mm)	0.50	0.75	1.02	1.13
Dielectric	PEG	PEG	PEG	PEG
diam. (mm)	2.00	3.50	4.30	4.80
Shield:				
Tape	Al/Pes/Al	Al/Pes/Al	Al/Pes/Al	Al/Pes/Al
Coverage	100%	100%	100%	100%
Braid	CuSn	CuSn	CuSn	CuSn
Coverage	50%	43%	32%	44%
Tape	PES	PES	PES	PES
Sheath	PVC	PVC	PVC	PVC
Colour	WHITE	WHITE	WHITE	WHITE
diam. (mm)	3.60	5.00	6.10	6.70
ELECTRICAL SPECIFICATIONS				
Impedance (Ω)	75±3	75±3	75±3	75±3
Capacity (pF/m)	55±2	55±2	55±2	55±2
Shielding efficiency (dB)	>75	>75	>75	>75
Velocity ratio (%)	82	85	85	85
S.R.L. MHz (dB)				
30÷470	>30	>28	>30	>30
470÷862	>28	>26	>30	>28
862÷2150	>26	>24	>28	>26
ATTENUATION				
MHz (dB/100 m)				
50	11.80	5.80	4.80	4.10
200	21.40	11.50	9.30	8.30
470	32.50	18.20	14.70	13.30
862	44.40	24.90	20.40	18.50
1000	48,00	27.00	22.20	20.20
1350	56.40	31.80	26.20	23.90
1750	65.10	36.60	30.50	27.80
2150	75.50	40.90	34.00	31.00
Min. bending radius				
(mm)	35	50	60	70

STANDARD PACKAGING

Code final no.	Manufacturing	A21.22_	A21.23_	A21.24_	A21.01_
0	in stock	200 m x 5	150 m x 5	100 m x 5	100 m x 5
1	in stock	100 m	150 m	100 m	100 m
7	UPON REQUEST	1000 m	1000 m	1000 m	1000 m

UPON REQUEST:
- BLACK PE sheath for external use
- WHITE LSZH sheath



RoHS









AMBRA90 CAVI

SPECIAL CABLES DIVISION

RG RADIO-FREQUENCY COAXIAL CABLES

- RG 58 C/U MIL
- RG 58 Type
- RG 59 B/U MIL
- RG 59 B/U Double Sheath
- RG 59 Type
- RG 11/U MIL
- RG 213/U MIL
- RG 174/U MIL

RADIOFREQUENCY COAXIAL CABLES

RoHS





Code	A22.001 RG 58 C/U MIL-C-17/28C	A22.021 RG 58 Type	A22.041 RG 59 B/U MIL-C-17/29C	A22.301 RG 59 B/U Double Sheath
▼ MANUFACTURING SPECIFICATIONS				
Inner Cond.	CuSn	Cu	FeCu	FeCu
diam. (mm)	19x0.18	19x0.18	0.58	0.58
Dielectric	PE	PE	PE	PE
diam. (mm)	2,95	2,95	3,70	3,70
Shield:				
Braid	CuSn	CuSn	Cu	Cu
Coverage	94%	83%	94%	94%
Sheath	PVC	PVC	PVC	PVC
Colour	BLACK	BLACK	BLACK	BLACK
diam. (mm)	4.90	4.90	6.10	7.50
▼ ELECTRICAL SPECIFICATIONS				
Impedance (Ω)	50±3	50±3	75±3	75±3
Capacity (pF/m)	100±2	100±2	67±2	67±2
Velocity ratio (%)	66	66	66	66
ATTENUATION				
MHz (dB/100 m)				
50	9.70	11.00	7.60	7.60
100	13.90	17.10	11.10	11.10
200	20.50	24.10	15.80	15.80
400	30.70	35.00	22.70	22.70
800	46.40	56.00	31.80	31.80
1000	53.80	70.10	38.60	38.60
Min. bending radius				
(mm)	50	50	60	60

▼ STANDARD PACKAGING

Code final no.	Packaging	No. pieces	Manufacturing
1	100 m coil in shrink film	5	in stock
7	1000 m reel	1	UPON REQUEST

Code	A22.061 RG 59 Type	A22.081 RG 11/U MIL-C-17/6B	A22.101 RG 213/U MIL-C-17/74C	A22.121 RG 174/U MIL-C-17/119F
▼ MANUFACTURING SPECIFICATIONS				
Inner Cond.	FeCu	CuSn	Cu	FeCu
diam. (mm)	0.58	7x0.40	7x0.70	7x0.160
Dielectric	PE	PE	PE	PE
diam. (mm)	3.70	7.20	7.25	1.50
Shield:				
Braid	Cu	Cu	Cu	CuSn
Coverage	80%	95%	95%	85%
Sheath	PVC	PVC	PVC	PVC
Colour	BLACK	BLACK	BLACK	BLACK
diam. (mm)	6.10	10.30	10.30	2.80
▼ ELECTRICAL SPECIFICATIONS				
Impedance (Ω)	75±3	75±3	50±3	50±3
Capacity (pF/m)	67±2	67±2	100±2	100±2
Velocity ratio (%)	66	66	66	66
ATTENUATION				
MHz (dB/100 m)				
50	7.80	4.60	4.60	18.60
100	11.20	7.20	6.40	27.40
200	16.50	10.10	10.10	40.70
400	20.00	15.40	15.30	60.40
800	35.70	24.50	24.20	91.80
1000	40.80	27.20	27.40	95.40
Min. bending radius				
(mm)	60	100	100	30

▼ STANDARD PACKAGING

Code final no.	Packaging	No. pieces	Manufacturing
1	100 m coil in shrink film	5	in stock
7	1000 m reel	1	UPON REQUEST



RoHS



PROPERTIES OF MAIN INSULATION MATERIALS

Material	Polyvinyl chloride (PVC)			Polyethylene (PE)			Polypropylene (PP)	Polyurethane (PUR)	Polyester (PETP)
VDE classification	Y			2Y			9Y	11Y	
				LDPE Low density	HDPE High density	PEE foam			
Operating temperature (C°)	-20 +70	-20 +80	-20 +90 (105)	-50 +70	-50 +90	-50 +70	-10 +90	-40 +80	-40 +100
Density (g/ml)	1.2 to 1.45	1.3 to 1.45	1.3 to 1.45	0.92	0.95	0.5 to 0.6	0.91	1.2	1.3
Ultimate tensile strength (N/mm^2)	>12.5	>12.5	>15	>10	>12.5	>3.5	>15	>25	>40
Ultimate elongation (%)	>150	>125	>150	>300	>400	>125	>300	>500	>200
Volume resistance at 20° C (Ωxcm)	10^{12} to 10^{15}			10^{17}			10^{16}	10^{10}	10^{12}
Relative permittivity	3.5 to 7			2.3	2.4	1.5	2.3	5 to 7	3 to 4
Dissipation ratio	$5x10^{12}$ to $1x10^{15}$			$2x10^{-4}$	$3x10^{-4}$	$6x10^{-4}$	$4x10^{-4}$	$2x10^{-2}$	1 to $2.5x10^{-2}$
Fire performance	Self-extinguishing			Flammable			Flammable	Very flammable	Flammable
Resistance to abrasion	Good, depending on hardness			Good			Good	Very good	Good
Water absorption (%)	0.4			>0.1			>0.1	1.5	0.5
Resistance to chemicals	Resistant to oil, grease, acids and solutions Partial resistance to solvent.			Resistant to diluted solutions, acids and petrol, grease, oil, water and several solvents.			Resistant to acids, solutions grease, oil and solvents.	Resistant to oil according to DIN VDE 0472, resistant to hydrolysis.	Resistant to grease, oil and solvents. Partial resistance to acids and solvents.
Special features	Suitable blends allow for special required features (such as resistance to oil and petrol, resistance to migration).			Zero halogens. PE foam with solid polyethylene skin.			Zero halogens. PE foam with solid polyethylene skin.	High resistance to impact. Elasticity.	High elasticity even at low temperatures.

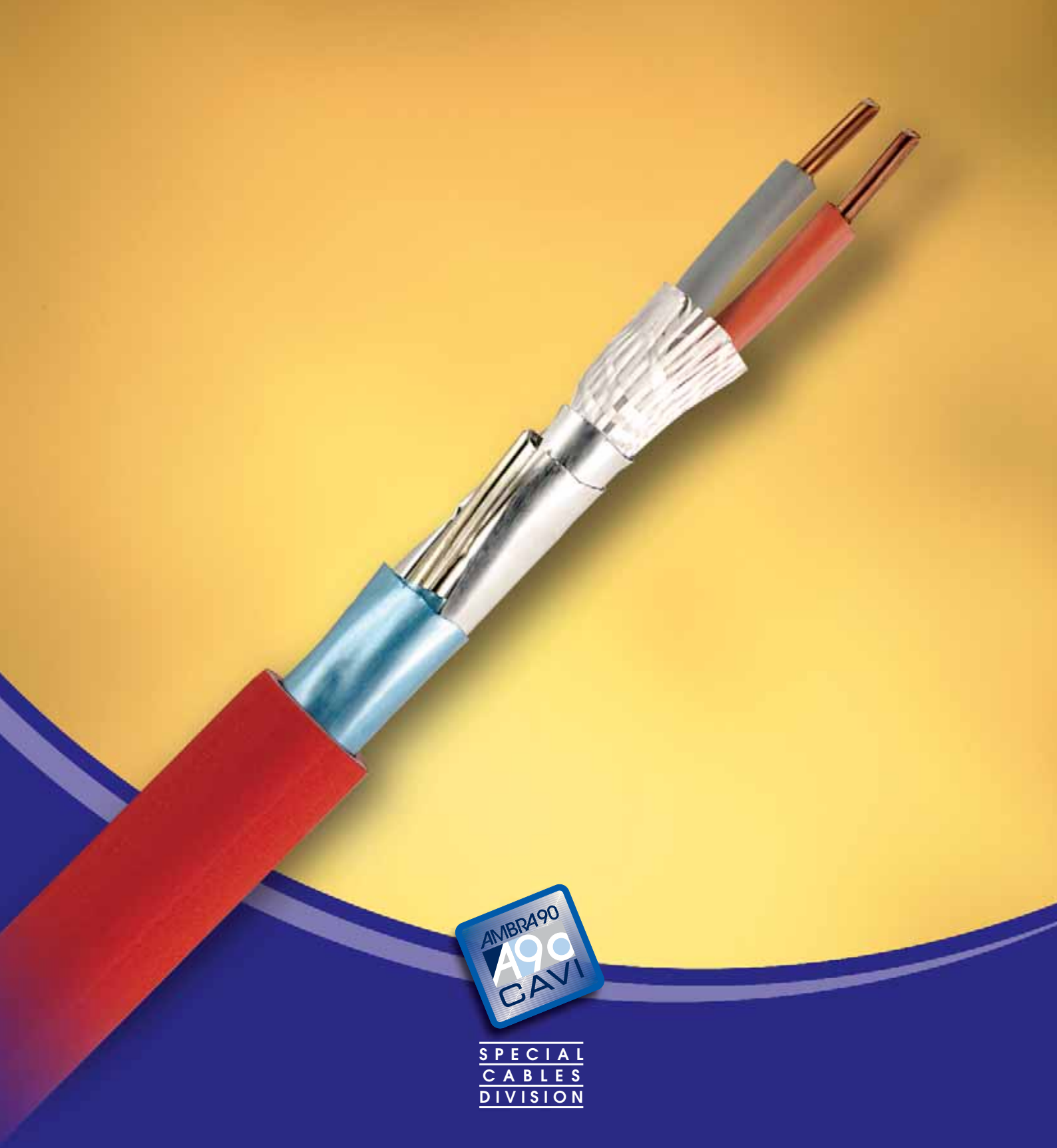

AMBRA90 CAVI

SPECIAL CABLES DIVISION

SECURITY CABLES

- FG4HOM1 (450/750)
- FTG100M1 (0,6/1kV)



RoHS

CE



FIRE-RESISTANT CABLES

FG4HOM1 (450/750V) - 90 min. at 750°C

GENERAL SPECIFICATIONS

In the event of an emergency, for example a fire, some devices must continue to work to ensure the safety of people and limit damage to premises. This is why cables with good thermal resistance are necessary to safeguard the transmission of signals and power. To obtain this result the cables are manufactured using materials such as ceramifiable silicone rubber.

STANDARD REFERENCE

- BS 7629
- BS 6387
- BS EN 50267/1
- CEI 20-22 III Cat.C / IEC 60332.3 Cat.C
- CEI 20-35 / IEC 60332.1
- CEI 20-37 -2-6-7
- CEI 20-36 / IEC 60331

ELECTRICAL SPECIFICATIONS

Section mm²	Test voltage V	Working voltage V	Condctor electrical resistance Ω/km
1.50	2000	450/750	12.10

MANUFACTURING SPECIFICATIONS

- Red copper inner conductor, single wire: 1,50 mm²;
- Inner conductor insulation in ceramifiable silicone rubber;
- Shield in Aluminium/Polyester (Al/Pet) tape;
- Tinned copper drain wire;
- Anti migration polyester (Pet) tape;
- Outer sheath in flame retardant, red M1 blend (CEI 20-11);
- Working temperature: -30°C ÷ +80°C;
- Minimum bending radius is 10 times the diameter of the cables;
- Use: fixed applications.

STANDARD PACKAGING

Code final no.	Packaging	No. pieces	Manufacturing
6	500 m reel	1	UPON REQUEST
7	1000 m reel	1	in stock

Code	No. conductors x sec. no. x mm²	Copper Weight kg/km	Conductor formation no. wires x diam.	Outer nom. Ø mm	Colour	Packaging
A48.606	2 x 1.50	43.50	1x1.38	8.60		500 m reel

FIRE-RESISTANT CABLES

FTG10OM1 (0,6/1kV) - 3 hour at 750°C

GENERAL SPECIFICATIONS

Cable for power, signalling and command with insulation in an elastomer, flame retardant blend, with zero halogens. Conductors are protected with a fire-resistant barrier composed of a glass/mica tape. The sheath is also made from an elastomer, flame retardant blend and has zero halogens. Cables suitable to power emergency devices in premises at risk of fire (safety lighting, smoke alarms, fire hydrants etc.)

STANDARD REFERENCE

- VDE 0295 cl.5 / IEC 60228 cl.5
- CEI UNEL 00722
- CEI 20-22 III cat.C / IEC 60332.3 cat.C
- CEI 20-35 / IEC 60332.1
- CEI 20-37 EN 50267 EN 50268
- CEI 20-36/2-1 IEC 60331-2.1
- CEI 20-36/4-0 EN 50200
- CEI 20-45

ELECTRICAL SPECIFICATIONS

Section mm²	Test voltage V	Working voltage V	Electrical resistance of the wires Ω/km	Min. resistance of insulation Mohm/km	Max.intensity of current A
1.50	4000	0.6/1kV	12.00	20	20.0
2.50	4000	0.6/1kV	8.00	20	26.0

MANUFACTURING SPECIFICATIONS

- Flexible inner conductors in bare copper;
- Flameproof barrier in glass/mica tape around conductor. Characteristic temperature 750°C;
- Conductor insulation in G10 elastomer blend;
- CEI UNEL 00722 Standard colouring of cores;
- Blue M1 type outer sheath (CEI 20-11).

TECHNICAL SPECIFICATIONS

- Working temperature: -25°C +90°C;
- Stockage temperature: -30°C +80°C;
- Minimum bending ratio: 10 times the external diameter of the cable;
- Field of application: emergency devices;
- Use: fixed applications.

STANDARD PACKAGING

Code final no.	Packaging	No. pieces	Manufacturing
6	500 m reel	1	UPON REQUEST
7	1000 m reel	1	in stock

Code	No. conductors x sec. no. x mm²	Copper Weight kg/km	Outer nom. Ø mm	Approx weight. kg/km	Colour	Packaging	No. pieces
A47.607	2 x 1.50	28.80	11.80	180		1000 m reel	1
A47.617	3 G 1.50	43.20	12.20	199		1000 m reel	1
A47.707	2 x 2.50	48.00	12.70	218		1000 m reel	1
A47.717	3 G 2.50	72.00	13.20	240		1000 m reel	1



RoHS

CE



CEI - UNEL 35011 II° Ed.

Symbol	Cable reference to standards
	Nature and flexibility of conductor
A	Alluminium
EF	Extra flexible
F	Flexible
FF	Very flexible
R	Rigid (normal or compact)
S	Sectorial cord
SU	Sectorial single wire
U	Round single wire
	Insulation material
C	Impregnated paper
E	Thermoplastic polyethylene based blend
E4	Silicone rubber based blend EI2 T.180°C
G4	Cross linked polyethylene based blend T.85°C
G7	High modulus ethylene-propylene rubber based blend T.90°C
G8	Ethylene-propylene rubber based blend for cables without protective coating T.85°C
G9	Elastomer rubber based blend also for cables without protective coating T.90°C
G10	Elastomer rubber base blend T.90°C
G19	Cross linked blend T.90°C
G20	Cross linked blend T.90°C
M	Mineral insulation
M9	Thermoplastic blend T.90°C
R	Polyvinyl chloride blend TI1 and TI2 T.70°C
R2	Polyvinyl chloride blend R2 T.70°C
R4	Polyamide resin based blend
R5	Fluorocarbon resin based blend
R5F	Blend for cables at high temperature FEP
R5M	Blend for cables at high temperature MFA
R5P	Blend for cables at high temperature PFA
R7	Polyvinyl chloride blend TI3 T.90°C
T4	Silver satin textile
V	Possibly impregnated glass textile
	Concentric conductors and screens
C	Concentric copper conductor
H	Metallic film or carbon film or Al tape screen
H1	Copper screen, made of strips or tapes or wires
H2	Copper plait or braiding screen
H3	Double copper plait or double braiding screen
H4	Corrugated steel longitudinal tape screen
H5	Coated aluminium longitudinal tape screen
Q	Copper sheath

Symbol	Cable reference to standards
	Non-metallic protective coatings
E	Linear thermoplastic material sheath Ez type
E4	Cross-linked polyethylene sheath E4M type
G	Natural and/or synthetic rubber sheath Gy type
G6	Chlorosulphonated polyethylene base sheath G6M type
K	Polychloroprene based or equivalent products Ky, Kn and Kz type sheath
R	Polyvinyl TM1, TM2 and Rz based sheath
R4	Elastomer rubber based blend also for cables without protective coating T.90°C
M1	Low emission of fumes, toxic and corrosive gas thermoplastic based sheath
M2	Low emission of fumes, toxic and corrosive gas - M2 elastomer based sheath
M3	Low emission of fumes, toxic and corrosive gas - M3 elastomer based sheath
M4	Low emission of fumes, toxic and corrosive gas - M4 elastomer based sheath
T	Normal textile plait
T2	Special textile plait
	Composition and shape of cable
– – –	No symbol: Unipolar cable
O	Joined core cables with or without fillers that form a round cable
D	Parallel cores (flat cable)
X	Core cables joined in a visible spiral
W	Parallel joined core cables with an intermediate groove
W1	Parallel joined core cables with intermediate insulating slot
	Metallic coatings
A1	Corrugated aluminium sheath
F	Cylindrical steel (normally) wire armour
H4	Corrugated steel longitudinal tape screen
H5	Coated aluminium longitudinal tape screen
L	Lead alloy sheath
N	Steel (normally) tape armour
P	Lead non-alloy sheath
Q	Copper sheath
Z	Flat steel (normally) wire armour

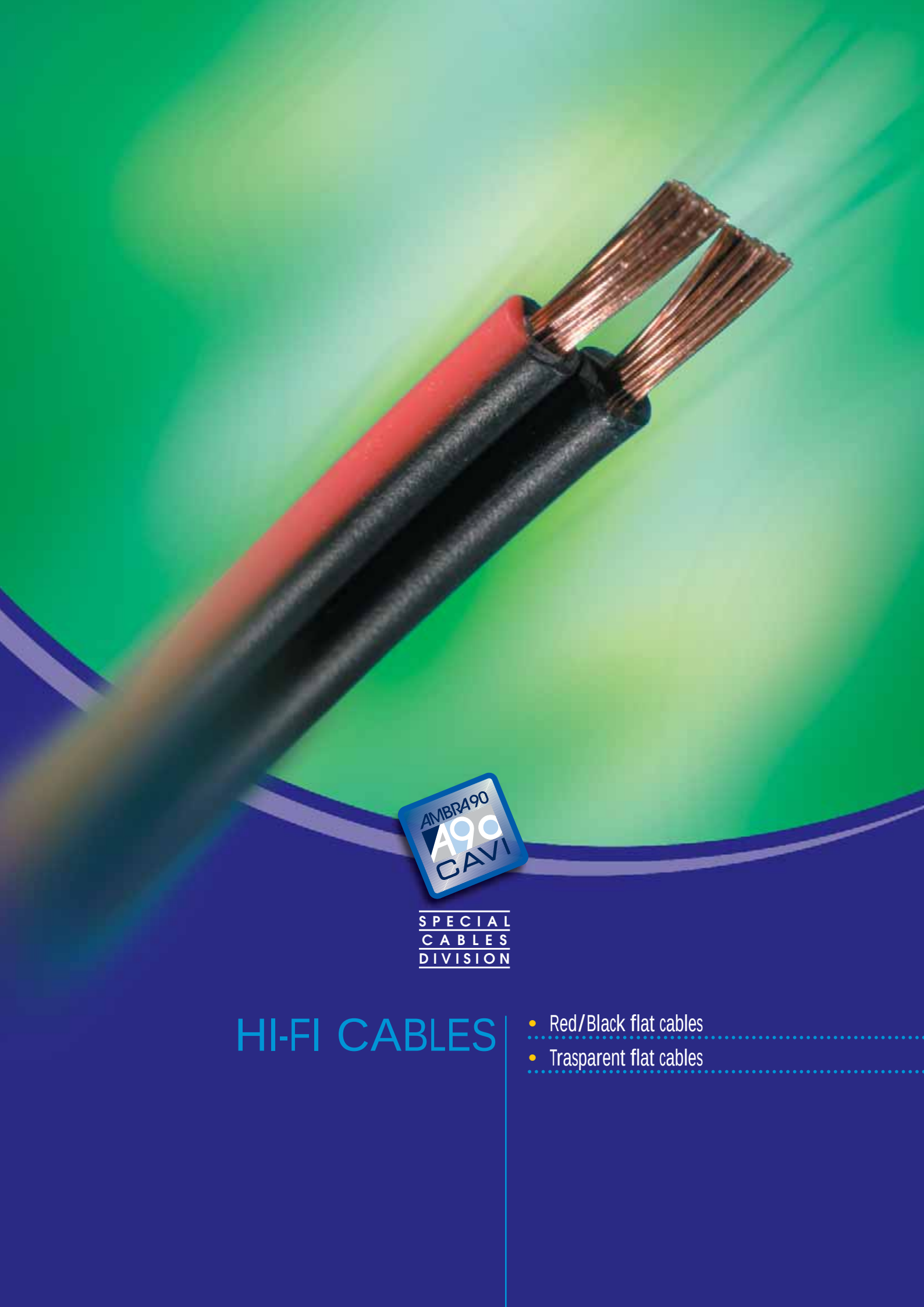

AMBRA90 CAVI

SPECIAL CABLES DIVISION

HI-FI CABLES

- Red/Black flat cables
- Trasparent flat cables



RoHS

HI-FI CABLES

GENERAL SPECIFICATIONS

These dual conductor flat cables are now mostly used in the HI-FI sector, especially in acoustic speaker connections. AMBRA90 produce a range of flat cables with a black, soft sheath with red polarisation along the sides of the sheath, as well as a transparent, soft sheath range with conductors recognised through the use of red and tin plated copper.

MANUFACTURING / ELECTRICAL SPECIFICATIONS

N. cond. x sec. no. x mm²	Approx weight Kg/Km	Size (HxL) mm	Minimum bending radius mm	Conductor electr. resistance Ω/Km	Capacity pF/m
2 x 0.50	16	2.10 x 4.20	30	48.6	56.4
2 x 0.75	21	2.30 x 4.60	35	29.7	60.8
2 x 1.00	27	2.50 x 5.00	38	21.9	70.0
2 x 1.50	37	2.90 x 5.80	42	14.6	73.2
2 x 2.50	58	3.50 x 7.00	50	8.45	65.0

STANDARD PACKAGING

Code final no.	Packaging	No. pieces	Manufacturing
1	100 m coil in shrink film	5	in stock
7	1000 m reel	1	UPON REQUEST



Red/Black flat cables

Code	No. conductors x sec. no. x mm²	Type	Copper Weight (kg / km)	Sheath	Sheath colour	Packaging	No. pieces
A30.011	2 x 0.50	Cu	9.60	PVC		100m coil	5
A30.021	2 x 0.75	Cu	14.40	PVC		100m coil	5
A30.031	2 x 1.00	Cu	19.20	PVC		100m coil	5
A30.041	2 x 1.50	Cu	28.80	PVC		100m coil	5
A30.051	2 x 2.50	Cu	48.00	PVC		100m coil	5

Transparent flat cables

Code	No. conductors x sec. no. x mm²	Type	Copper Weight (kg / km)	Sheath	Sheath colour	Packaging	No. pieces
A32.001	2 x 0.50	Cu - CuSn	9.60	PVC		100m coil	5
A32.011	2 x 0.75	Cu - CuSn	14.40	PVC		100m coil	5
A32.021	2 x 1.00	Cu - CuSn	19.20	PVC		100m coil	5
A32.031	2 x 1.50	Cu - CuSn	28.80	PVC		100m coil	5
A32.041	2 x 2.50	Cu - CuSn	48.00	PVC		100m coil	5





AMBRA90 A90 CAVI

SPECIAL CABLES DIVISION

FLEX CABLES

- Superflex Cables (300/500V)
- Extraflexible Cables (300/500V)



RoHS

CE

SUPERFLEX CABLES (300 / 500V)

GENERAL SPECIFICATIONS

These types of cables, thanks to their remarkable flexibility guaranteed by the type of conductor used, allow for very tight twisting and the particular type of blend used for the sheath makes this type of cable suitable for connecting portable devices, tool extensions, household appliances and electrical leisure and gardening equipment.

STANDARD REFERENCE

- IEC 60228 cl.5
- VDE 0295 cl.5
- CEI 20-20
- CEI - UNEL 00722

MANUFACTURING SPECIFICATIONS

- Flexible inner conductors in Class 5 bare copper;
- Conductor insulation in PVC. Colour compliant with standard: CEI-UNEL 00722;
- Outer sheath in an orange, PVC based blend (RAL 2003).

TECHNICAL SPECIFICATIONS

- Working temperature in the range: -10°C ÷ +70°C;
- Minimum bending radius: is 10 times the outer diameter of the cables;
- Use: mobile applications.

STANDARD PACKAGING

Code final no.	Packaging	No. pieces	Manufacturing
1	100 m coil in shrink film	5	in stock
7	1000 m reel	1	UPON REQUEST

Code	No. conductors x sec. no. x mm²	Outer nom. Ø mm	Copper Weight (kg / km)	Approx. weight kg / km	Colour	Packaging	No. pieces
A34.601	2 x 1.00	6.90	19.20	74		100 m coil	5
A34.611	3 G 1.00	7.20	28.80	88		100 m coil	5
A34.701	2 x 1.50	7.80	28.80	96		100 m coil	5
A34.711	3 G 1.50	8.50	43.20	125		100 m coil	5
A34.811	3 G 2.50	10.20	72.00	187		100 m coil	5





EXTRAFLEX CABLES (300/500V)

GENERAL SPECIFICATIONS

These types of cables, thanks to their remarkable flexibility guaranteed by the type of conductor used, allows for very tight twisting. The use of cotton fillers and the particular blend used for the sheath ensures this type of cable is suitable for heavy building site work and to connect portable devices, tool extensions, household appliances and electrical leisure and gardening equipment. These cables show good resistance to hydrocarbons and abrasion. They can also be used in cable holder chains, even for high-speed cycles.

STANDARD REFERENCE

- IEC 60228 cl.5
- VDE 0295 cl.5
- CEI 20-20
- CEI - UNEL 00722

MANUFACTURING SPECIFICATIONS

- Flexible inner conductors in Class 6 bare copper;
- Conductor insulation in PVC. Colour compliant with standard: CEI-UNEL 00722;
- Fillers in yarn waste to ensure greater flexibility;
- Outer sheath in an orange polyurethane based blend (RAL 2003).

TECHNICAL SPECIFICATIONS

- Working temperature in the range: -20°C ÷ +80°C;
- Minimum bending radius: is 7.5 times the outer diameter of the cables;
- Oil resistance: good;
- Resistance to chemicals: good for acids and solvents;
- Use: mobile applications.

STANDARD PACKAGING

Code final no.	Packaging	No. pieces	Manufacturing
1	100 m coil in shrink film	5	in stock
7	1000 m reel	1	UPON REQUEST

Code	No. conductors x sec. no. x mm²	Outer nom. Ø mm	Copper Weight (kg/km)	Approx. weight kg/km	Colour	Packaging	No. pieces
A33.001	2 x 0.75	6.60	14.40	57		100 m coil	5
A33.011	3 G 0.75	7.50	21.60	70		100 m coil	5
A33.101	2 x 1.00	7.10	19.20	67		100 m coil	5
A33.111	3 G 1.00	8.00	28.80	80		100 m coil	5
A33.201	2 x 1.50	8.20	28.80	92		100 m coil	5
A33.211	3 G 1.50	8.90	43.20	118		100 m coil	5
A33.221	4 G 1.50	10.20	57.60	151		100 m coil	5
A33.301	2 x 2.50	9.90	48.00	128		100 m coil	5
A33.311	3 G 2.50	10.30	72.00	174		100 m coil	5
A33.321	4 G 2.50	11.40	96.00	218		100 m coil	5



RoHS

CE



DIN 47100

Conductor Colours

COND. No.	COLOUR
1	White
2	Brown
3	Green
4	Yellow
5	Grey
6	Pink
7	Blue
8	Red
9	Black
10	Purple
11	Grey / Pink
12	Red / Blue
13	White / Green
14	Brown / Green
15	White / Yellow
16	Yellow / Brown
17	White / Grey
18	Grey / Brown
19	White / Pink
20	Pink / Brown
21	White / Blue
22	Brown / Blue
23	White / Red
24	Brown / Red
25	White / Black
26	Brown / Black
27	Grey / Green
28	Yellow / Grey
29	Pink / Green
30	Yellow / Pink
31	Green / Blue
32	Yellow / Blue
33	Green / Red
34	Yellow / Red
35	Green / Black
36	Yellow / Black
37	Grey / Blue
38	Pink / Blue
39	Grey / Red
40	Pink / Red
41	Grey / Black
42	Pink / Black
43	Blue / Black
44	Red / Black
45	Orange
46	Orange / White
47	Orange / Green
48	Orange / Yellow
49	Orange / Grey
50	Orange / Blue

DIN 47100

For multipolar paired cables

Conductor colours

COND. No.	COLOUR	
	Conductor A	Conductor B
1	White	Brown
2	Green	Yellow
3	Grey	Pink
4	Blue	Red
5	Black	Purple
6	Grey / Pink	Red / Blue
7	White / Green	Brown / Green
8	White / Yellow	Yellow / Brown
9	White / Grey	Grey / Brown
10	White / Pink	Pink / Brown
11	White / Blue	Brown / Blue
12	White / Red	Brown / Red
13	White / Black	Brown / Black
14	Grey / Green	Yellow / Grey
15	Pink / Green	Yellow / Pink
16	Green / Blue	Yellow / Blue
17	Green / Red	Yellow / Red
18	Green / Black	Yellow / Black
19	Grey / Blue	Pink / Blue
20	Grey / Red	Pink / Red
21	Grey / Black	Pink / Black
22	Blue / Black	Red / Black
23	Orange	Orange / White
24	Orange / Green	Orange / Yellow
25	Orange / Grey	Orange / Blue
26	Orange / Black	Orange / Red
27	Orange / Pink	Orange / Purple
28	Purple / White	Purple / Brown
29	Purple / Green	Purple / Yellow
30	Purple / Grey	Purple / Pink
31	Purple / Blue	Purple / Red
32	Purple / Black	Green / Yellow

CEI - UNEL 00722 - 5ª ed.

Conductor colours

COND. No.	COLOUR
2	Light blue
	Brown
3	Yellow / Green
	Brown
	Light blue
4	Yellow / Green
	Black
	Light blue
	Brown
5	Yellow / Green
	Black
	Light blue
	Brown
	Black
> 5	Yellow / Green
	Black numbered in progression

LEGEND

Cu	Bare copper
CuSn	Tinned copper
FeCu	Copper steel
PE	Polyethylene
PEE	Chemically Expanded Polyethylene Foam
PEG	Expanded Polyethylene Foam (with nitrogen gas injected)
PP	Polypropylene
PETP	Polyester
PPE	Foamed Polypropylene
PVC	Polyvinyl chloride
PVC-FR	Flame retardan Polyvinyl chloride
PUR	Polyurethane
LSZH-FRNC	Zero halogen, flame resistant, low emission of fumes, and toxic and corrosive gas
Pet	Polyester tape
Al / Pet	Aluminium / Polyester tape
Al / Pet / Al	Aluminium / Polyester / Aluminium tape
Cu / Pet	Copper / Polyester tape
Kf	Percentage of shield covering
S.R.L	Structural Reflection Loss

STANDARD DIN VDE

Symbol	Description
A	Cable for external use
G	Cable for underground laying
J	Installation cable (fixed applications)
JE	Cable for electronics (fixed application)
Li	Extra-flexible conductor
S	Command and signal cable
b	Armouring
Bd	Twisting in bundles
C	Tinned copper braid shield
D	Spiral copper shield
J	Cable with yellow-green earth conductor
(K)	Coupled copper tape with polyester
JZ	Cable with numbered conductors, yellow-green earth conductor
(L)	Aluminium tape coupled with Polyester Al / Pes tape
Lg	Concentrical construction
(L)2Y	Aluminium tape welded with PE
O	Cable without yellow-green earth conductor
OZ	Cable without yellow-green earth conductor, and numbered conductors
PiC	Shielded copper braid pairs
PiMF	Individually shielded pairs with Al / Pes tape
Q	Steel wire braid
(St)	Al / Pes shield
Stli	Copper steel conductor
v	Tinned copper
Yv	PVC reinforced sheath
2Yv	PE reinforced sheath
(Z)	Self-supporting steel armouring
H	Zero halogen compound flame retardant
X	Reticulated Polyvinyl chloride PVC
2X	Reticulated Polyethilene (XLPE)
Y	Polyvinyl chloride PVC
Yu	Polyvinyl chloride PVC, flame retardant
Yv	Polyvinyl chloride PVCt reinforced sheath
Yw	Polyvinyl chloride PVC - 90°C
2Y	Polyethylene PE
02Y	Cellular polyethylene PEE
02Y S	Foam-skin insulation
9Y	Polypropylene PP
11Y	Polyurethane PUR

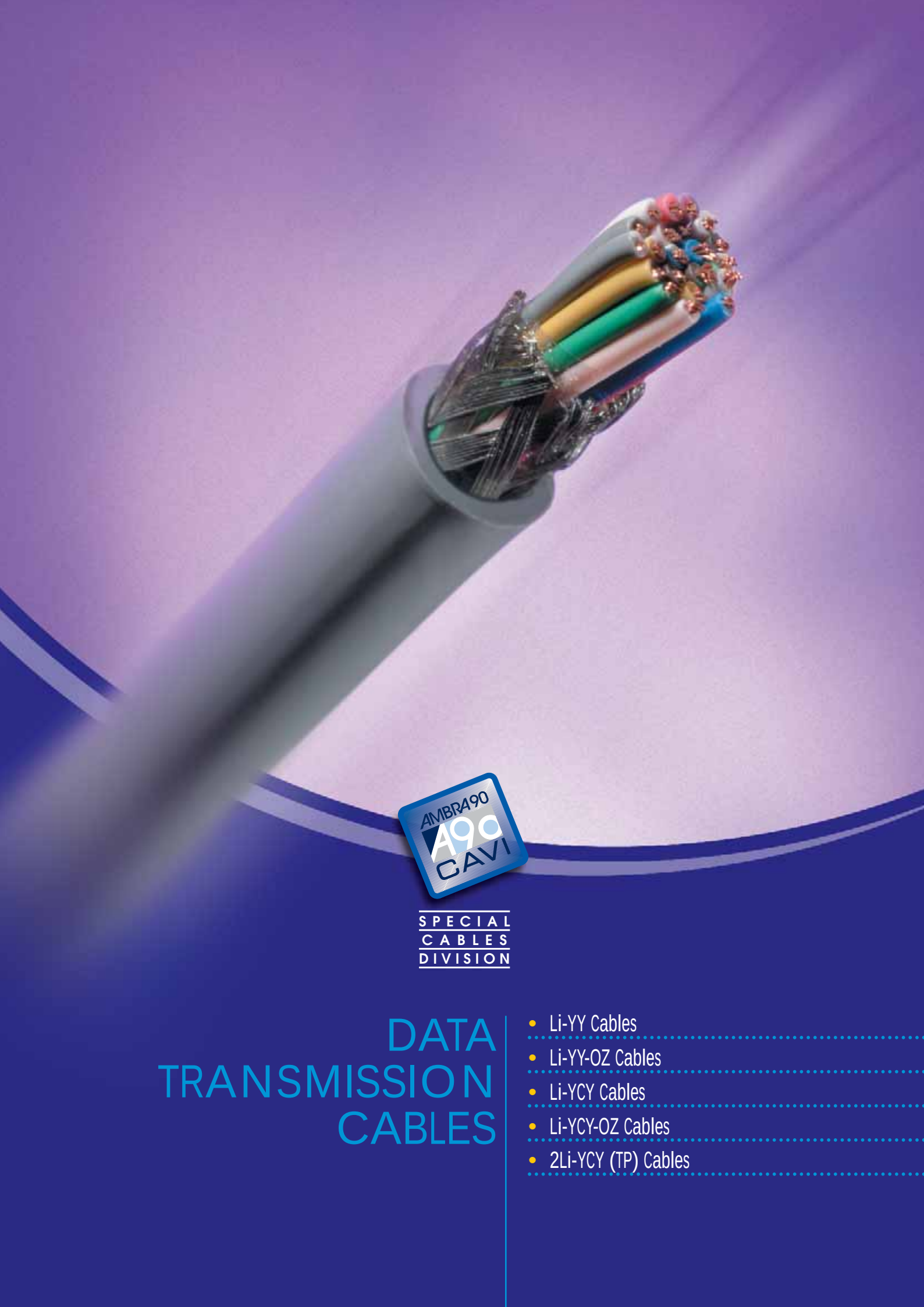

AMBRA90 CAVI

SPECIAL CABLES DIVISION

DATA TRANSMISSION CABLES

- Li-YY Cables
- Li-YY-OZ Cables
- Li-YCY Cables
- Li-YCY-OZ Cables
- 2Li-YCY (TP) Cables



RoHS



Li-YY • Li-YY-OZ CABLES

GENERAL SPECIFICATIONS

Flexible cables for data transmission used for the process control on industrial appliances, electronic devices, computers interconnection, electronic systems of control and regulation, etc..., particularly where special protections against electromagnetic interferences are not needed. These cables are in compliance with the VDE 0812 standard concerning their construction, electric and mechanical specifications. They can be placed in fixed or mobile laying but not in cyclic laying (cable chain).

Section mm²	Test Voltage V	Working Voltage V	Electrical resistance of the wires Ohm/km	Min. insulation resistance Mohm/km	Working temperature °C
0.14	1500	250	136.00	20	-20/+80
0.25	1500	250	78.00	20	-20/+80
0.34	1500	250	52.20	20	-20/+80
0.50	1500	250	39.00	20	-20/+80
0.75	1500	250	26.00	20	-20/+80
1.00	1500	250	19.00	20	-20/+80
1.50	1500	250	12.00	20	-20/+80

MANUFACTURING SPECIFICATIONS

- Flexible inner conductors in bare copper;
- Conductors insulation in PVC;
- Colour of the wires in according to DIN 47100 standard. For Li-YY-OZ the wires are black numbered in white;
- Polyester tape over wires;
- Outer sheath in Flame retardant PVC (CEI 20-22II) Grey colour (RAL 7001).

STANDARD REFERENCES

- VDE 0295 Cl.5 / IEC 60228 Cl.5
- CEI 20-22 II / IEC 60332.3
- CEI 20-37 I
- DIN 47100
- CEI 20-35 / IEC 60332.1

Li-YY data transmission cables

Code	No. conductors x sec. no. x mm²	Outer nom. Ø mm	Copper weight Kg/Km	Approx weight Kg/Km	Sheath colour	Packaging	No. pieces
A83.011	2 x 0.14	3.40	2.7	15		100 m coil	5
A83.021	3 x 0.14	3.60	4.0	18		100 m coil	5
A83.031	4 x 0.14	3.80	5.4	21		100 m coil	5
A83.041	5 x 0.14	4.10	6.7	24		100 m coil	5
A83.051	6 x 0.14	4.40	8.1	28		100 m coil	5
A83.061	7 x 0.14	4.40	9.4	30		100 m coil	5
A83.071	8 x 0.14	5.00	10.8	36		100 m coil	5
A83.081	10 x 0.14	5.60	13.4	43		100 m coil	5
A83.091	12 x 0.14	5.80	16.1	48		100 m coil	5
A83.101	14 x 0.14	6.00	18.8	53		100 m coil	5
A83.111	16 x 0.14	6.30	21.5	60		100 m coil	5
A83.121	18 x 0.14	6.60	24.2	65		100 m coil	5
A83.131	21 x 0.14	7.00	28.2	73		100 m coil	5
A83.141	25 x 0.14	7.60	33.6	84		100 m coil	5
A83.151	27 x 0.14	8.00	36.3	94		100 m coil	5
A83.161	30 x 0.14	8.20	40.3	102		100 m coil	5
A83.211	2 x 0.25	3.80	4.8	19		100 m coil	5
A83.221	3 x 0.25	4.00	7.2	23		100 m coil	5
A83.231	4 x 0.25	4.30	9.6	28		100 m coil	5
A83.241	5 x 0.25	4.90	12.0	35		100 m coil	5
A83.251	6 x 0.25	5.20	14.4	40		100 m coil	5
A83.261	7 x 0.25	5.20	16.8	44		100 m coil	5
A83.271	8 x 0.25	5.80	19.2	49		100 m coil	5
A83.281	10 x 0.25	6.40	24.0	59		100 m coil	5

Li-YY data transmission cables

Code	No. conductors x sec. no. x mm²	Outer nom. Ø mm	Copper weight Kg / Km	Approx. weight Kg / Km	Sheath colour	Packaging	No. pieces
A83.291	12 x 0.25	6.60	28.8	67		100 m coil	5
A83.301	14 x 0.25	6.90	33.6	75		100 m coil	5
A83.311	16 x 0.25	7.30	38.4	84		100 m coil	5
A83.321	18 x 0.25	7.60	43.2	91		100 m coil	5
A83.331	21 x 0.25	8.20	50.4	108		100 m coil	5
A83.341	25 x 0.25	9.00	61.0	125		100 m coil	5
A83.351	27 x 0.25	9.20	65.0	133		100 m coil	5
A83.361	30 x 0.25	9.50	72.0	145		100 m coil	5
A83.411	2 x 0.34	4.20	6.5	23		100 m coil	5
A83.421	3 x 0.34	4.50	9.8	29		100 m coil	5
A83.431	4 x 0.34	5.00	13.1	37		100 m coil	5
A83.441	5 x 0.34	5.40	16.3	44		100 m coil	5
A83.451	6 x 0.34	5.80	19.6	50		100 m coil	5
A83.461	7 x 0.34	5.80	22.8	55		100 m coil	5
A83.471	8 x 0.34	6.50	26.1	63		100 m coil	5
A83.481	10 x 0.34	7.20	32.6	75		100 m coil	5
A83.491	12 x 0.34	7.40	39.2	86		100 m coil	5
A83.501	14 x 0.34	7.80	45.7	97		100 m coil	5
A83.511	16 x 0.34	8.40	52.2	113		100 m coil	5
A83.521	18 x 0.34	8.80	59.0	124		100 m coil	5
A83.531	21 x 0.34	9.30	69.0	141		100 m coil	5
A83.541	25 x 0.34	10.30	82.0	167		100 m coil	5
A83.551	27 x 0.34	10.50	88.0	177		100 m coil	5
A83.561	30 x 0.34	10.90	98.0	194		100 m coil	5
A83.611	2 x 0.50	4.80	9.6	30		100 m coil	5
A83.621	3 x 0.50	5.30	14.4	40		100 m coil	5
A83.631	4 x 0.50	5.80	19.2	49		100 m coil	5
A83.641	5 x 0.50	6.20	24.0	58		100 m coil	5
A83.651	6 x 0.50	6.70	28.8	67		100 m coil	5
A83.661	7 x 0.50	6.70	33.6	74		100 m coil	5
A83.671	8 x 0.50	7.50	38.4	84		100 m coil	5
A83.681	10 x 0.50	8.60	48.0	106		100 m coil	5
A83.691	12 x 0.50	8.90	58.0	122		100 m coil	5
A83.701	14 x 0.50	9.30	67.2	137		100 m coil	5
A83.711	16 x 0.50	9.80	77.0	153		100 m coil	5
A83.721	18 x 0.50	10.40	86.4	172		100 m coil	5
A83.731	21 x 0.50	11.00	100.8	196		100 m coil	5
A83.741	25 x 0.50	12.10	120.0	228		100 m coil	5
A83.751	27 x 0.50	12.60	130.0	251		100 m coil	5
A83.761	30 x 0.50	13.00	144.0	274		100 m coil	5
A83.811	2 x 0.75	5.40	14.4	38		100 m coil	5
A83.821	3 x 0.75	5.80	21.6	51		100 m coil	5
A83.831	4 x 0.75	6.30	29.0	63		100 m coil	5
A83.841	5 x 0.75	6.90	36.0	75		100 m coil	5
A83.851	6 x 0.75	7.50	42.0	88		100 m coil	5
A83.861	7 x 0.75	7.50	50.0	98		100 m coil	5
A83.871	8 x 0.75	8.60	58.0	116		100 m coil	5
A83.881	10 x 0.75	9.70	72.0	141		100 m coil	5
A83.891	12 x 0.75	10.10	86.0	165		100 m coil	5
A83.901	14 x 0.75	10.60	104.0	187		100 m coil	5
A83.911	16 x 0.75	11.20	115.0	210		100 m coil	5
A83.921	18 x 0.75	11.80	132.0	233		100 m coil	5



RoHS





RoHS

Li-YY-OZ data transmission cables

Code	No. conductors x sec. no. x mm²	Outer nom. Ø mm	Copper weight Kg / Km	Approx. weight Kg / Km	Sheath colour	Packaging	No. pieces
A84.011	2 x 1.00	5.70	19.2	48		100 m coil	5
A84.021	3 x 1.00	6.00	28.8	62		100 m coil	5
A84.031	4 x 1.00	6.60	38.4	76		100 m coil	5
A84.041	5 x 1.00	7.20	48.0	98		100 m coil	5
A84.051	6 x 1.00	8.00	57.6	117		100 m coil	5
A84.061	7 x 1.00	8.00	67.2	124		100 m coil	5
A84.071	8 x 1.00	8.90	76.8	141		100 m coil	5
A84.081	10 x 1.00	10.20	96.0	175		100 m coil	5
A84.091	12 x 1.00	10.50	115.2	202		100 m coil	5
A84.101	14 x 1.00	11.10	134.4	231		100 m coil	5
A84.111	16 x 1.00	11.80	153.6	268		100 m coil	5
A84.126	18 x 1.00	12.50	172.8	300		500 m drum	1
A84.211	2 x 1.50	6.70	28.8	65		100 m coil	5
A84.221	3 x 1.50	7.10	43.2	86		100 m coil	5
A84.231	4 x 1.50	8.00	57.6	113		100 m coil	5
A84.241	5 x 1.50	8.70	72.0	143		100 m coil	5
A84.251	6 x 1.50	9.50	86.4	167		100 m coil	5
A84.261	7 x 1.50	9.50	100.8	179		100 m coil	5
A84.271	8 x 1.50	10.80	115.2	207		100 m coil	5
A84.281	10 x 1.50	12.40	144.0	261		100 m coil	5
A84.291	12 x 1.50	12.80	172.8	297		100 m coil	5
A84.306	14 x 1.50	13.50	201.6	339		500 m drum	1
A84.316	16 x 1.50	14.60	230.4	405		500 m drum	1
A84.326	18 x 1.50	15.40	259.2	447		500 m drum	1

STANDARD PACKAGING

Code final no.	Packaging	No. pieces	Manufacturing
1	100 m coil in shrink film	5	UPON REQUEST
6	500 m reel	1	UPON REQUEST
7	1000 m reel	1	UPON REQUEST





RoHS



Li-YCY • Li-YCY-OZ CABLES

GENERAL SPECIFICATIONS

Flexible cables for data transmission used for the process control on industrial appliances, electronic devices, computers interconnection, electronic systems of control and regulation, etc..., particularly where special protections against electromagnetic interferences are needed. These cables are in compliance with the VDE 0812 standard concerning their construction, electric and mechanical specifications. They can be placed in fixed or mobile laying but not in cyclic laying (cable chain).

Section mm²	Test Voltage V	Working Voltage V	Electrical resistance of the wires Ohm/km	Min. insulation resistance Mohm/km	Working temperature °C
0.14	1500	250	136.00	20	-20/+80
0.25	1500	250	78.00	20	-20/+80
0.34	1500	250	52.20	20	-20/+80
0.50	1500	250	39.00	20	-20/+80
0.75	1500	250	26.00	20	-20/+80
1.00	1500	250	19.00	20	-20/+80
1.50	1500	250	12.00	20	-20/+80

MANUFACTURING SPECIFICATIONS

- Flexible inner conductors in bare copper;
- Conductors insulation in PVC;
- Colour of the wires in according to DIN 47100 standard. For Li-YCY-OZ the wires are black numbered in white;
- Polyester tape over wires;
- Tinned copper braid. Coverage (kf) > 85%;
- Outer sheath in Flame retardant PVC (CEI 20-22II) Grey colour (RAL 7001).

STANDARD REFERENCES

- VDE 0295 Cl.5 / IEC 60228 Cl.5
- CEI 20-22 II / IEC 60332.3
- CEI 20-37 I
- DIN 47100
- CEI 20-35 / IEC 60332.1

Li-YCY data transmission cables

Code	No. conductors x sec. no. x mm²	Outer nom. Ø mm	Copper weight Kg/Km	Approx. weight Kg/Km	Sheath colour	Packaging	No. pieces
A80.011	2 x 0.14	3.80	12.0	22		100 m coil	5
A80.021	3 x 0.14	4.00	13.0	26		100 m coil	5
A80.031	4 x 0.14	4.20	14.5	30		100 m coil	5
A80.041	5 x 0.14	4.50	15.5	34		100 m coil	5
A80.051	6 x 0.14	4.80	18.2	38		100 m coil	5
A80.061	7 x 0.14	4.80	19.0	40		100 m coil	5
A80.071	8 x 0.14	5.50	21.3	49		100 m coil	5
A80.081	10 x 0.14	6.10	28.7	58		100 m coil	5
A80.091	12 x 0.14	6.30	30.5	65		100 m coil	5
A80.101	14 x 0.14	6.50	32.0	71		100 m coil	5
A80.111	16 x 0.14	6.80	43.2	77		100 m coil	5
A80.121	18 x 0.14	7.10	51.0	84		100 m coil	5
A80.131	21 x 0.14	7.50	56.0	93		100 m coil	5
A80.141	25 x 0.14	8.10	61.0	106		100 m coil	5
A80.151	27 x 0.14	8.30	65.0	110		100 m coil	5
A80.161	30 x 0.14	8.50	69.0	122		100 m coil	5

Li-YCY data transmission cables

Code	No. conductors x sec. no. x mm²	Outer nom. Ø mm	Copper weight Kg / Km	Approx. weight Kg / Km	Sheath colour	Packaging	No. pieces
A80.211	2 x 0.25	4.20	15.8	27		100 m coil	5
A80.221	3 x 0.25	4.40	21.0	32		100 m coil	5
A80.231	4 x 0.25	4.70	24.0	37		100 m coil	5
A80.241	5 x 0.25	5.40	29.0	49		100 m coil	5
A80.251	6 x 0.25	5.70	31.0	54		100 m coil	5
A80.261	7 x 0.25	5.70	37.0	57		100 m coil	5
A80.271	8 x 0.25	6.30	42.1	65		100 m coil	5
A80.281	10 x 0.25	6.90	47.0	76		100 m coil	5
A80.291	12 x 0.25	7.10	54.0	85		100 m coil	5
A80.301	14 x 0.25	7.40	59.0	95		100 m coil	5
A80.311	16 x 0.25	7.80	65.0	105		100 m coil	5
A80.321	18 x 0.25	8.10	82.0	114		100 m coil	5
A80.331	21 x 0.25	8.70	93.0	130		100 m coil	5
A80.341	25 x 0.25	9.60	114.0	158		100 m coil	5
A80.351	27 x 0.25	9.80	122.0	167		100 m coil	5
A80.361	30 x 0.25	10.10	132.0	180		100 m coil	5
A80.411	2 x 0.34	4.60	21.0	32		100 m coil	5
A80.421	3 x 0.34	4.90	26.0	39		100 m coil	5
A80.431	4 x 0.34	5.50	28.0	50		100 m coil	5
A80.441	5 x 0.34	5.90	31.0	59		100 m coil	5
A80.451	6 x 0.34	6.30	45.0	67		100 m coil	5
A80.461	7 x 0.34	6.30	48.0	70		100 m coil	5
A80.471	8 x 0.34	7.00	52.0	80		100 m coil	5
A80.481	10 x 0.34	7.70	74.0	94		100 m coil	5
A80.491	12 x 0.34	7.90	80.0	106		100 m coil	5
A80.501	14 x 0.34	8.30	86.0	117		100 m coil	5
A80.511	16 x 0.34	8.90	94.0	136		100 m coil	5
A80.521	18 x 0.34	9.30	103.0	149		100 m coil	5
A80.531	21 x 0.34	9.90	116.0	173		100 m coil	5
A80.541	25 x 0.34	10.80	134.0	197		100 m coil	5
A80.551	27 x 0.34	11.10	142.0	214		100 m coil	5
A80.561	30 x 0.34	11.50	158.0	230		100 m coil	5



RoHS





RoHS



Li-YCY data transmission cables

Code	No. conductors x sec. no. x mm²	Outer nom. Ø mm	Copper weight Kg / Km	Approx. weight Kg / Km	Sheath colour	Packaging	No. pieces
A80.611	2 x 0.50	5.50	29.0	45		100 m coil	5
A80.621	3 x 0.50	5.80	39.0	55		100 m coil	5
A80.631	4 x 0.50	6.30	46.0	64		100 m coil	5
A80.641	5 x 0.50	6.70	52.0	74		100 m coil	5
A80.651	6 x 0.50	7.20	66.0	86		100 m coil	5
A80.661	7 x 0.50	7.20	68.0	92		100 m coil	5
A80.671	8 x 0.50	8.00	80.0	105		100 m coil	5
A80.681	10 x 0.50	9.10	93.0	130		100 m coil	5
A80.691	12 x 0.50	9.40	116.0	150		100 m coil	5
A80.701	14 x 0.50	9.90	122.0	170		100 m coil	5
A80.711	16 x 0.50	10.40	129.0	187		100 m coil	5
A80.721	18 x 0.50	11.00	152.0	211		100 m coil	5
A80.731	21 x 0.50	11.60	184.0	234		100 m coil	5
A80.741	25 x 0.50	12.70	250.0	270		100 m coil	5
A80.751	27 x 0.50	13.20	265.0	294		100 m coil	5
A80.761	30 x 0.50	13.60	297.0	325		100 m coil	5
A80.811	2 x 0.75	6.10	38.0	57		100 m coil	5
A80.821	3 x 0.75	6.50	50.0	70		100 m coil	5
A80.831	4 x 0.75	7.00	57.0	82		100 m coil	5
A80.841	5 x 0.75	7.50	70.0	96		100 m coil	5
A80.851	6 x 0.75	8.10	87.0	112		100 m coil	5
A80.861	7 x 0.75	8.10	96.0	121		100 m coil	5
A80.871	8 x 0.75	9.20	110.0	143		100 m coil	5
A80.881	10 x 0.75	10.40	140.0	178		100 m coil	5
A80.891	12 x 0.75	10.80	151.0	200		100 m coil	5
A80.901	14 x 0.75	11.30	167.0	230		100 m coil	5
A80.911	16 x 0.75	11.90	183.0	256		100 m coil	5
A80.921	18 x 0.75	12.50	207.0	280		100 m coil	5

Li-YCY-OZ data transmission cables

Code	No. conductors x sec. no. x mm²	Outer nom. Ø mm	Copper weight Kg / Km	Approx. weight Kg / Km	Sheath colour	Packaging	No. pieces
A84.511	2 x 1.0	6.30	46.0	61		100 m coil	5
A84.521	3 x 1.0	6.60	56.0	76		100 m coil	5
A84.531	4 x 1.0	7.20	69.0	92		100 m coil	5
A84.541	5 x 1.0	7.80	89.0	112		100 m coil	5
A84.551	6 x 1.0	8.60	105.0	129		100 m coil	5
A84.561	7 x 1.0	8.60	111.0	141		100 m coil	5
A84.571	8 x 1.0	9.60	130.0	161		100 m coil	5
A84.581	10 x 1.0	10.90	140.0	204		100 m coil	5
A84.591	12 x 1.0	11.30	168.0	232		100 m coil	5
A84.606	14 x 1.0	11.90	198.0	265		500 m drum	1
A84.616	16 x 1.0	12.50	218.0	294		500 m drum	1
A84.626	18 x 1.0	13.20	256.0	327		500 m drum	1
A84.711	2 x 1.50	7.30	63.0	83		100 m coil	5
A84.721	3 x 1.50	7.90	76.0	108		100 m coil	5
A84.731	4 x 1.50	8.60	98.0	132		100 m coil	5
A84.741	5 x 1.50	9.30	116.0	156		100 m coil	5
A84.751	6 x 1.50	10.20	140.0	190		100 m coil	5
A84.761	7 x 1.50	10.20	152.0	208		100 m coil	5
A84.771	8 x 1.50	11.80	172.0	250		100 m coil	5
A84.786	10 x 1.50	13.60	192.0	314		500 m drum	1
A84.796	12 x 1.50	14.00	254.0	360		500 m drum	1
A84.806	14 x 1.50	14.90	272.0	413		500 m drum	1
A84.816	16 x 1.50	15.60	285.0	45		500 m drum	1
A84.826	18 x 1.50	16.70	378.0	515		500 m drum	1

STANDARD PACKAGING

Code final no.	Packaging	No. pieces	Manufacturing
1	100 m coil in shrink film	5	UPON REQUEST
6	500 m reel	1	UPON REQUEST
7	1000 m reel	1	UPON REQUEST



RoHS





RoHS



2Li-YCY (TP) CABLES

GENERAL SPECIFICATIONS

Flexible cables for data transmission used for the process control on industrial appliances, electronic devices, computers interconnection, electronic systems of control and regulation, etc..., particularly where special protections against electromagnetic interferences are needed. These cables are in compliance with the VDE 0812 standard concerning their construction, electric and mechanical specifications. They can be placed in fixed or mobile laying but not in cyclic laying (cable chain).

Section mm²	Test Voltage V	Working Voltage V	Electrical resistance of the wires Ohm/km	Min. insulation resistance Mohm/km	Working temperature °C
0.14	1500	250	136.00	20	-20/+80
0.25	1500	250	78.00	20	-20/+80
0.34	1500	250	52.20	20	-20/+80

MANUFACTURING SPECIFICATIONS

- Flexible inner conductors in bare copper;
- Conductors insulation in PVC;
- Colour of the wires in according to DIN 47100 standard;
- Twisted pairs;
- Polyester tape over wires;
- Tinned copper braid. Coverage (kf) > 85%;
- Outer sheath in Flame retardant PVC (CEI 20-22II) Grey colour (RAL 7001).

STANDARD REFERENCES

- VDE 0295 Cl.5 / IEC 60228 Cl.5
- CEI 20-22 II / IEC 60332.3
- CEI 20-37 I
- DIN 47100
- CEI 20-35 / IEC 60332.1

STANDARD PACKAGING

Code final no.	Packaging	No. pieces	Manufacturing
1	100 m coil in shrink film	5	UPON REQUEST
6	500 m reel	1	UPON REQUEST
7	1000 m reel	1	UPON REQUEST

Code	No. conductors x sec. no. x mm²	Outer nom. Ø mm	Copper weight Kg/Km	Approx. weight Kg/Km	Sheath colour	Packaging	No. pieces
A81.001	2 x 2 x 0.14	4.60	18.5	33		100 m coil	5
A81.011	3 x 2 x 0.14	5.40	23.0	44		100 m coil	5
A81.021	4 x 2 x 0.14	6.10	26.6	56		100 m coil	5
A81.031	5 x 2 x 0.14	6.70	30.7	65		100 m coil	5
A81.041	6 x 2 x 0.14	6.90	48.5	71		100 m coil	5
A81.051	8 x 2 x 0.14	7.50	53.7	85		100 m coil	5
A81.061	10 x 2 x 0.14	8.30	59.0	99		100 m coil	5
A81.101	2 x 2 x 0.25	5.20	28.0	43		100 m coil	5
A81.111	3 x 2 x 0.25	6.30	39.6	60		100 m coil	5
A81.121	4 x 2 x 0.25	6.90	45.0	72		100 m coil	5
A81.131	5 x 2 x 0.25	7.70	58.0	84		100 m coil	5
A81.141	6 x 2 x 0.25	7.90	69.0	93		100 m coil	5
A81.151	8 x 2 x 0.25	8.90	76.0	123		100 m coil	5
A81.161	10 x 2 x 0.25	9.80	102.0	144		100 m coil	5
A81.201	2 x 2 x 0.34	6.00	36.9	57		100 m coil	5
A81.211	3 x 2 x 0.34	7.00	44.9	73		100 m coil	5
A81.221	4 x 2 x 0.34	7.70	54.2	87		100 m coil	5
A81.231	5 x 2 x 0.34	8.80	63.5	108		100 m coil	5
A81.241	6 x 2 x 0.34	9.10	73.1	126		100 m coil	5
A81.251	8 x 2 x 0.34	10.00	88.4	153		100 m coil	5
A81.261	10 x 2 x 0.34	11.00	107.0	180		100 m coil	5



AMBRA90 A90 CAVI

SPECIAL CABLES DIVISION

ELECTRONICS CABLES

- CABLES FOR EIA RS 422
- CABLES FOR EIA RS 232
- CABLES FOR EIA RS 485

CABLES FOR EIA RS APPLICATIONS



RoHS



▼ GENERAL SPECIFICATIONS

These types of cables are used for connection to computerised control systems, where it is important to comply with impedance values and the capacity to guarantee the correct transmission of the signal.

▼ STANDARD PACKAGING

Code final no.	Packaging	No. pieces	Manufacturing
1	100m coil in shrink film	5	UPON REQUEST
6	500m reel	1	UPON REQUEST
7	1000m reel	1	UPON REQUEST

■ Cables for EIA RS 422

▼ SHIELDED PAIR CABLES MANUFACTURING SPECIFICATIONS

- Inner conductors in tinned copper, multi-wire
- Conductor insulation in foamed Polyolefine
- Twisted cores with Polyester tape (Pet), drain wire and shield in twisted Aluminium/Polyester (Al/Pet) tape
- Anti-migration polyester (Pet) tape
- Outer sheath in PVC-FR (CEI 20-22 II), Grey colour
- Inner conductor electrical resistance max 82.0 Ω/km
- Standard impedance 100 Ω
- Mutual capacity of the pair 45 pF/m
- Capacity between a conductor and all the others connected to the shield 80 pF/m
- Working temperature -10°C ÷ +70°C
- Minimum bending radius is 10 times the diameter of the cables
- Use: fixed applications

Code	Formation no. x type	Pairs	Outer nom. Ø mm	Copper weight kg/km	Approx. weight kg/km	Colour	Packaging
A79.011(1)	2x2xAWG 24/7	Ne-Ro/Ne-Bi	8.00	12.70	62		100 m coil
A79.021(2)	4x2xAWG 24/7	Ne-Ro/Ne-Bi Ne-Ve/Ne-Bl	9.20	25.20	82		100 m coil

(1) Corresponding Belden 9729
(2) Corresponding Belden 9728

Cables for EIA RS 422

TOTALLY SHIELDED CABLE MANUFACTURING SPECIFICATIONS

- Inner conductors in tinned copper, multi-wire
- Conductor insulation in polyolefine
- Twist of the cores with different pitches
- Polyester tape (Pet)
- Tinned copper drain wire
- Tinned copper braid shield with coverage (kf) >70%
- Outer sheath in PVC-FR (CEI 20-22 II), Grey colour
- Electrical resistance of the inner conductor max 82.0 Ω/km
- Standard impedance 100 Ω
- Mutual capacitance of the pair 50pF/m
- Capacity between a conductor and all the others connected to the shield 95 pF/m
- Working temperature -10°C ÷ +70°C
- Minimum bending radius is 10 times the cable's diameter
- Use: fixed applications

Code	Formation no. x type	Pairs	Outer nom. Ø mm	Copper weight kg/km	Approx. weight kg/km	Colour	Packaging
A79.031(1)	2x2xAWG 24/7	Bi/Bl-Bl/Bi Bi/Ar-Ar/Bi	7.40	25.20	63		100 m coil

(1) Corresponding Belden 9829



RoHS

Cables for EIA RS 232

MANUFACTURING SPECIFICATIONS

- Inner conductors in tinned copper, multi-wire
- Conductor insulation in PVC
- Twist of the cores with different pitches
- Polyester tape (Pet)
- Tinned copper drain wire
- Shield in Aluminium/Polyester (Al/Pet) tape
- Outer sheath in PVC-FR (CEI 20-22 II), colour Grey
- Electrical resistance of the inner conductor max 82.0 Ω/km
- Standard impedance 75 Ω
- Mutual capacity of the pair 130 pF/m for the cable with one pair, 100 pF/m for the others
- Capacity between a conductor and all the others connected to the shield 240 pF/m for the cable with one pair, 160 pF/m for the others
- Working temperature -10°C ÷ +70°C
- Minimum bending radius is 10 times the cable's diameter
- Use: fixed applications

Code	Formation no. x type	Pairs	Outer nom. Ø mm	Copper weight kg/km	Approx. weight kg/km	Colour	Packaging
A79.101(1)	1x2xAWG 24/7	Ne-Ro	4.00	6.40	25		100 m coil
A79.111(2)	2x2xAWG 24/7	Ne-Ro/Ne-Bi	5.60	10.60	36		100 m coil
A79.121(3)	4x2xAWG 24/7	Ne-Ro/Ne-Bi Ne-Ve/Ne-Bl	6.70	19.0	61		100 m coil

(1) Corresponding Belden 9501
(2) Corresponding Belden 9502
(3) Corresponding Belden 9504



RoHS





Cables for EIA RS 485

BRAID SHIELD CABLES MANUFACTURING SPECIFICATIONS

- Inner conductors in tinned copper, multi-wire
- Conductor insulation in polyethylene
- Twist of the cores with different pitches
- Shield in Aluminium/Polyester (Al/Pet) tape
- Tinned copper drain wire
- Tinned copper braid shield with covering (kf) 90%
- Outer sheath in PVC-FR (CEI 20-22 II), colour Grey
- Electrical resistance of the inner conductor max 82.0 Ω/km
- Standard impedance 120 Ω
- Mutual capacitance of the pair 45 pF/m
- Capacity between a conductor and all the others connected to the shield is 75 pF/m
- Working temperature -10°C ÷ +70°C
- Minimum bending radius is 10 times the cable's diameter
- Use: fixed applications

Code	Formation no. x type	Pairs	Outer nom. Ø mm	Copper weight kg/km	Approx. weight kg/km	Colour	Packaging
A79.201(1)	1x2xAWG 24/7	Bi/Bl - Bl/Bi	5.80	17.20	50		100 m coil
A79.211(2)	2x2xAWG 24/7	Bi/Bl - Bl/Bi Bi/Ar-Ar/Bi	8.40	32.50	82		100 m coil

(1) Corresponding Belden 9841
(2) Corresponding Belden 9842

Cables for EIA RS 485

TAPE SHIELDED CABLE MANUFACTURING SPECIFICATIONS

- Red copper inner conductor, single wire
- Conductor insulation in foamed polyethylene
- Twist of the cores with different pitches
- Polyester tape (Pet)
- Tinned copper drain wire
- Shield in Aluminium/Polyester/Alluminium (Al/Pet/Al) tape
- Outer sheath in PVC-FR (CEI 20-22 II), colour Grey
- Electrical resistance of the inner conductor max 55.0 Ω/km
- Standard impedance 150 Ω
- Mutual capacitance of the pair 50 pF/m
- Capacity between a conductor and all the others connected to the shield of 30 pF/m
- Working temperature -10°C ÷ +70°C
- Minimum bending radius is 10 times the cable's diameter
- Use: fixed applications

Code	Formation no. x type	Pairs	Outer nom. Ø mm	Copper weight kg/km	Approx. weight kg/km	Colour	Packaging
A79.221(1)	2x2xAWG 22/1	Ne-Gi / Ro-Bl	9.80	16.80	55		100 m coil

(1) Corresponding Belden 9184

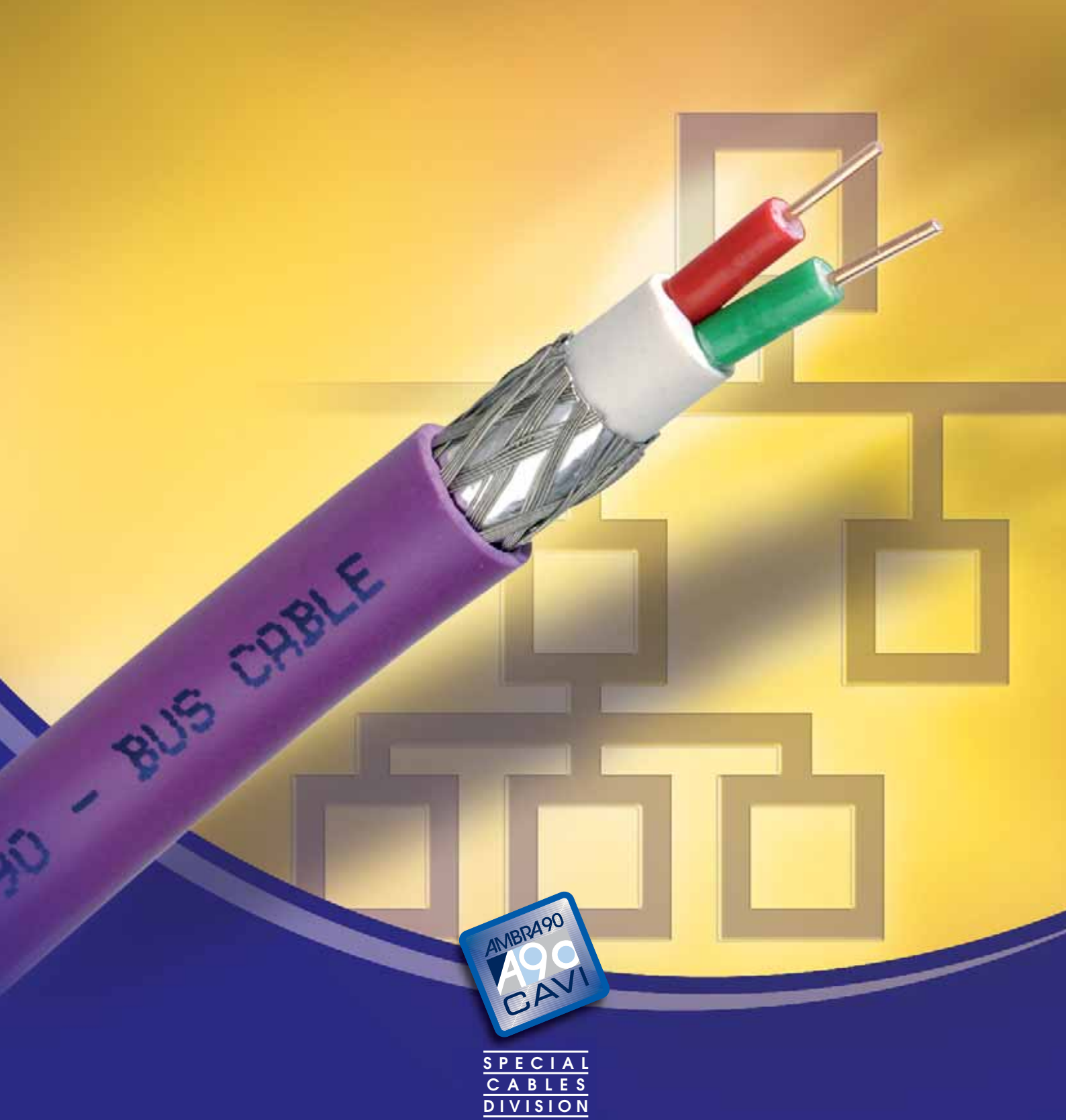

AMBRA90 CAVI

SPECIAL CABLES DIVISION

FIELDBUS CABLES

- PROFINET
- PROFIBUS FMS-DP L2/FIP
- PROFIBUS PA
- DEVICENET
- INTERBUS
- AS-INTERFACE
- CAN-BUS
- EIB-KONNEX



RoHS

PROFINET

GENERAL SPECIFICATIONS

These copper cables are designed for industrial applications (Industrial Ethernet) to ensure superior transmission properties under very difficult operating conditions. These cables are cat. 5 100 Ohm and shielded to support TCP/IP in PROFInet™ systems with specific features up to 100MHz.

ELECTRICAL SPECIFICATIONS

- Standard impedance: 100 Ohm +/- 15 Ohm from 1 to 100 MHz
- Conductors resistance: 55 Ohm/km
- Insulating resistance: 0.5 GOhm/km min.
- Mutual capacity: 50 nF/km
- Test voltage: 2.0 kV.

Frequency (MHz)	10	16	62,5	100
Attenuation (dB/100 m)	6.5	8.2	17	22
Next (dB)	50.3	47.3	38.4	35.3
ACR	43.8	39.7	27.8	23.8

MANUFACTURING SPECIFICATIONS

- Bare copper inner conductors AWG 22/1;
- Conductors insulation in PE;
- Core colours: white, yellow, blue, orange;
- Cores twisted: in four;
- Polyester tape;
- Shield: Al/Pes tape + CuSn braid (covering 85%);
- Outer sheath in FR-PVC, GREEN colour.

TECHNICAL SPECIFICATIONS

- Working temperature: -40°C / +70°C
- Field of application: PROFInet type fieldbus systems;
- Use: fixed applications.

STANDARD REFERENCE

PROFInet draft • CEI 20-35/1-1 • CEI EN 50265-2-1

STANDARD PACKAGING

Code final no.	Packaging	No. pieces	Manufacturing
1	100 m coil	5	UPON REQUEST
6	500 m reel	1	UPON REQUEST
7	1000 m reel	1	UPON REQUEST



Code	Formation no x mm²	Outer nom. Ø mm	Copper weight kg/km	Approx. weight kg/km	Sheath Colour	Packaging	No. pieces
A87.431	1x4xAWG 22/1	6.50	32.0	70	■■■■	100 m coil	5

ON REQUEST:
- AWG 22/7 flexible conductors for mobile applications;
- AWG 22/19 flexible conductors and sheath in PUR for applications in cable chains.

PROFIBUS FMS-DP L2/FIP

GENERAL SPECIFICATIONS

These shielded copper cables are suitable for the transmission of data in FIP (Flux Information Processes), PROFIBUS-DP (Dezentrale Pheripherie) and PROFIBUS-FMS (Fieldbus Message Specification) type systems with electrical specifications in compliance with standard EIA-RS-485. The transmission speed varies from 9.6 kbps to 12 Mbps based on the length of the section in question:

PROFIBUS-DP		FIP
9.60 kbps = 1200 m max	500.00 kbps = 400 m max	1.00 Mbps = 200 m max
19.20 kbps = 1200 m max	1.50 Mbps = 200 m max	2.50 Mbps = 200 m max
93.75 kbps = 1200 m max	12.00 Mbps = 100 m max	
187.50 kbps = 1000 m max		

ELECTRICAL SPECIFICATIONS

- Conductor ohm max resistance: 115 Ohm/km
- Min insulation resistance: 150 MOhm/km
- Standard impedance: 150 Ohm +/- 15 Ohm (>= 3MHz)
- Mutual capacity (800 MHz): 28 nF/km
- Test core voltage: 1 kV
- Shield resistance: 10 Ohm/km
- Attenuation: 5,0 dB/km (200 kHz) - 21 dB/km (4 MHz) - 40 dB/km (16 MHz)
- Transfer impedance: <= 10,0 mOhm/m (10 MHz)

MANUFACTURING SPECIFICATIONS

- Red copper inner conductors (diam. 0.64 mm);
- Conductors insulation in PEE;
- Cores colour: red, green;
- First sheath in PVC;
- Shield: Al/Pes tape + CuSn braid (coverage 60%);
- Outer sheath in FR-PVC. - Sheath colour: violet.

TECHNICAL SPECIFICATIONS

- Working temperature: -40°C / +70°C;
- Field of application: PROFIBUS FMS-DP and L2/FIP type fieldbus systems;
- Use: fixed applications.

STANDARD REFERENCE

PROFIBUS standard

- EN50170
- EN 61158-2
- DIN 19245
- CEI EN 50265-2-1
- CEI 20-35/1-1

STANDARD PACKAGING

Code final no.	Packaging	No. pieces	Manufacturing
1	100 m coil	5	in stock
6	500 m reel	1	in stock
7	1000 m reel	1	in stock

Code	Formation no x mm²	Outer nom. Ø mm	Copper weight kg/km	Approx. weight kg/km	Sheath Colour	Packaging	No. pieces
A87.221	1x2x0.65	8.00	25.0	75	■■■■	100 m coil	5

ON REQUEST:

- Oil resistant PVC sheath
- Sheath in LSZH
- Sheath in PE for underground laying.



RoHS



RoHS





PROFIBUS PA

GENERAL SPECIFICATIONS

These shielded copper cables are suitable to power and transmit data in PROFIBUS-PA (Process Automation) type systems from master devices to sensors and actuators in complicated security environments. Designed to support data transmission speeds to 31.25 Kbps. The maximum length of the section depends on various factors, such as: power supply voltage and power absorption.

ELECTRICAL SPECIFICATIONS

- Conductors ohm max resistance: 22 Ohm/km max.
- Min insulation resistance: 1 GOhm/km min.
- Standard impedance: 100 Ohm +/- 20%
- Mutual capacity (800 MHz): 55 nF/km
- Test core voltage: 2 kV
- Shield resistance: 11 Ohm/km
- Attenuation: 3,0 dB/km (39 kHz) - 4,0 dB/km (100 kHz) - 15 dB/km (1 kHz)
- Transfer impedance: <= 15,0 mOhm/m (100 kHz) - <= 18,0 mOhm/m (1 MHz)

MANUFACTURING SPECIFICATIONS

- Red copper inner conductors (sec. 1.0 mm²);
- Conductors insulation in PE;
- Cores colouring: red, green;
- Twist of core with fillers;
- Shield: Pes tape + CuSn braid (covering 85%)
- Outer sheath in FR-PVC. - Sheath colour: blue.

TECHNICAL SPECIFICATIONS

- Working temperature: -20°C / +70°C
- Field of application: PROFIBUS-PA type fieldbus systems;
- Use: fixed application.

STANDARD REFERENCE

PROFIBUS standard

- EN 50170
- EN 61158-2
- DIN 19245
- CEI EN 50265-2-1
- CEI 20-35/1-1

STANDARD PACKAGING

Code final no.	Packaging	No. pieces	Manufacturing
1	100 m coil	5	UPON REQUEST
6	500 m reel	1	UPON REQUEST
7	1000 m reel	1	UPON REQUEST

Code	Formation no x mm²	Outer nom. Ø mm	Copper weight kg/km	Approx. weight kg/km	Sheath Colour	Packaging	No. pieces
A87.281	1x2x1.00	7.60	44.0	76	■■■■	100 m coil	5

ON REQUEST:
- Sheath in LSZH
- Black sheath in FR-PVC.

DEVICENET

CARATTERISTICHE GENERALI

DeviceNet is a Bus system developed by Allen Bradley (Rockwell Automation). These cables are used for the interconnection of various industrial devices (limit switches, photoelectric switches, valves, motor operators and devices to control variable frequency operations such as PLC). DeviceNet is based on CAN technology. Transmission speed depends on the length of each Bus section, or rather:

DEVICENET "THICK" CABLE		DEVICENET "THIN" CABLE	
125 kbps	500 m	125 kbps	100 m
250 kbps	250 m	250 kbps	100 m
500 kbps	100 m	500 kbps	100 m

The main feature of this BUS system is a data pair and pair for power supply integrated in the same cable.

ELECTRICAL SPECIFICATIONS	1x2xAWG18 + 1x2xAWG15 ("THICK" cable)	1x2xAWG24 + 1x2xAWG22 ("THIN" cable)
• Conductors ohm max resistance:	22.5 Ohm/km (AWG18) 11.4 Ohm/km (AWG15)	85 Ohm/km (AWG24) 52 Ohm/km (AWG22)
• Min. insulation resistance:	20 GOhm/km	20 GOhm/km
• Standard impedance (data pair):	120 Ohm +/- 10%	120 Ohm +/- 10%
• Mutual capacity (data pair) (800 Hz):	39 nF/km	39 nF/km
• Test core voltage:	2 kV	2 kV
• Attenuation (data pair):	4.2 dB/km (125 kHz) 8.1 dB/km (500 kHz)	9,5 dB/km (125 kHz) 16.4 dB/km (500 kHz)
• Transfer impedance:	<= 15 mOhm/m (10 MHz)	<= 15 mOhm/m (10 MHz)

MANUFACTURING SPECIFICATIONS		
• Tinned copper inner conductors:	AWG18/19 (data) AWG15/19 (power supply)	AWG24/19 (data) AWG22/19 (power supply)
• Conductor insulation:	PE (data) - PVC (power supply)	PE (data) - PVC (power supply)
• Core colour:	BI/BL (data) - RO/NE (power supply) single pairs: Al/Pes tape	BI/BL (data) - RO/NE (power supply) single pairs: Al/Pes tape
• Shield:	global: CuSn braid (kf 70%) + CuSn drain wire	global: CuSn braid (kf 70%) + CuSn drain wire
• Outer sheath:	FR PVC – colour GREY	FR PVC – colour GREY

TECHNICAL SPECIFICATIONS

- Working temperature: -20°C / +80°C;
- Field of application: DEVICENET type fieldbus systems;
- Use: fixed applications.

STANDARD REFERENCE

DEVICENET standard • CEI EN 50265-2-1 • CEI 20-35/1-1

STANDARD PACKAGING

Code final no.	Packaging	No. pieces	Manufacturing
1	100 m coil	5	UPON REQUEST
6	500 m reel	1	UPON REQUEST
7	1000 m reel	1	UPON REQUEST

Code	Formation no x mm²	Outer nom. Ø mm	Copper weight kg/km	Approx. weight kg/km	Sheath Colour	Packaging	No. pieces
A87.481	1x2xAWG18 + 1x2xAWG15	12.00	88.0	192		100 m coil	5
A87.491	1x2xAWG24 + 1x2xAWG22	7.00	33.0	67		100 m coil	5

ON REQUEST: • Sheath in LSZH.



RoHS





RoHS

INTERBUS

GENERAL SPECIFICATIONS

These paired and shielded copper cables are suitable for the transmission of data from master devices to sensors and actuators in INTERBUS systems and to power devices. Based on the length of the INTERBUS segments, the following transmission speeds are available:
500 kbps = max. 400 m ("remote" cable) = max. 50 m ("remote installation" cable)

ELECTRICAL SPECIFICATIONS

• Conductors ohm max resistance:	78 Ohm/km (0.22 mm²) - 19.5 Ohm/km (1.0 mm²)
• Min insulation resistance:	1.0 GOhm/km
• Standard impedance:	100 Ohm +/- 15 Ohm
• Mutual capacity (800 MHz):	50 nF/km
• Test core voltage:	1 kV
• Shield resistance:	18 Ohm/km
• Attenuation:	1.5 dB/100 m (256 kHz) - 2.5 dB/100 m (772 kHz) - 2.7 dB/100 m (1 MHz) 6.9 dB/100 m (4 MHz) - 12 dB/100 m (10 MHz) - 15.5 dB/100m (16 MHz) - 17.2 dB/100 m (20 MHz)
• Transfer impedance:	<= 250 mOhm/m (30 MHz)

MANUFACTURING SPECIFICATIONS	3x2x0.25 ("remote" cable)	3x2x0.25 + 3x1.0 ("installation remote" cable)
• Red copper inner conductors:	AWG24/19	AWG24/19 - (32x0.195)
• Conductor insulation:	PE	PE
• Cores colour:	DIN 47100	DIN 47100, brown, blue, yellow/green
• Tape:	Pes	Pes
• Shield:	Cu braid (coverage 85%)	Cu braid (coverage 85%)
• Outer sheath:	FR PUR – colour Violet	FR PUR – colour Violet

TECHNICAL SPECIFICATIONS

• Working temperature:	-20°C / +70°C;
• Field of application:	INTERBUS type fieldbus systems;
• Use:	for mobile applications in cable chains.

STANDARD REFERENCE

INTERBUS standard

- EN 50254
- EN 61158
- DIN 19258
- CEI EN 50265-2-1
- CEI 20-35/1-1
- DIN 47100

STANDARD PACKAGING

Code final no.	Packaging	No. pieces	Manufacturing
1	100 m coil	5	UPON REQUEST
6	500 m reel	1	UPON REQUEST
7	1000 m reel	1	UPON REQUEST







Code	Formation no x mm²	Outer nom. Ø mm	Copper weight kg/km	Approx. weight kg/km	Sheath Colour	Packaging	No. pieces
A87.441	3x2x0.25	7.60	39.0	75	■■■■	100 m coil	5
A87.451	3x2x0.25 + 3x1.0	8.00	62.0	97	■■■■	100 m coil	5

ON REQUEST: • Sheath in LSZH.

INTERBUS

GENERAL SPECIFICATIONS

These paired and shielded copper cables are suitable for the transmission of data from master devices to sensors and actuators in INTERBUS systems and to power devices. Based on the length of the INTERBUS segments, the following transmission speeds are available:
500 kbps = max. 400 m ("remote" cable) = max. 50 m ("remote installation" cable)

ELECTRICAL SPECIFICATIONS

- Conductors ohm max resistance: 90 Ohm/km (0.22 mm²) - 19.5 Ohm/km (1.0 mm²)
- Min insulating resistance: 1.0 GOhm/km
- Standard impedance: 100 Ohm +/- 15 Ohm
- Mutual capacity (800 MHz): 50 nF/km
- Test core voltage: 1 kV
- Shield resistance: 13 Ohm/km
- Attenuation: 1.5 dB/100 m (256 kHz) - 2.5 dB/100 m (772 kHz) - 2.7 dB/100 m (1 MHz) 6.9 dB/100 m (4 MHz) - 12 dB/100 m (10 MHz) - 15.5 dB/100m (16 MHz) - 17.2 dB/100 m (20 MHz)
- Transfer impedance: <= 250 mOhm/m (30 MHz)

MANUFACTURING SPECIFICATIONS	3x2x0.22 ("remote" cable)	3x2x0.22 + 3x1.0 ("installation remote" cable)
Red copper inner conductors:	AWG24/7	AWG24/7 - (32x0,195)
Conductor insulation:	PE	PE
Cores colour:	DIN 47100	DIN 47100, brown, blue, yellow/green
Tape:	Pes	Pes
Shield:	Cu braid (coverage 85%)	Cu braid (coverage 85%)
Outer sheath:	FR PUR – colour Violet	FR PUR – colour Violet

TECHNICAL SPECIFICATIONS

- Working temperature: -40°C / +70°C;
- Field of application: INTERBUS type fieldbus systems;
- Use: fixed applications.

STANDARD REFERENCE

INTERBUS standard
- EN 50254
- EN 61158
- DIN 19258
- CEI EN 50265-2-1
- CEI 20-35/1-1
- DIN 47100

STANDARD PACKAGING

Code final no.	Packaging	No. pieces	Manufacturing
1	100 m coil	5	UPON REQUEST
6	500 m reel	1	UPON REQUEST
7	1000 m reel	1	UPON REQUEST

Code	Formation no x mm²	Outer nom. Ø mm	Copper weight kg/km	Approx. weight kg/km	Sheath Colour	Packaging	No. pieces
A87.461	3x2x0.22	7.00	37	70	■■■■	100 m coil	5
A87.471	3x2x0.22 + 3x1.0	8.00	60	87	■■■■	100 m coil	5

ON REQUEST: • Sheath in LSZH.







RoHS



AS-INTERFACE

GENERAL SPECIFICATIONS

Non shielded cable with two parallel conductors to power and transmit data in AS-I (Actuator Sensor Interface) type systems. Supports transmission speeds of 31.25 kbps between the masters and sensors / actuators. The trapezium shape eases installation and prevents pole inversion. Connection is via insulation perforation. The yellow AS-I cable is used to provide 30 V power to the sensors and transfer data. The black AS-I cable can beused for the 24V actuators.

ELECTRICAL SPECIFICATIONS

Section mm²	Test voltage V	Working voltage V (Yellow)	Working voltage V (Black)	Elect. resistance of conductors Ω/Km	Min. insulating resistance MΩ/Km
1.50	2000	32.0	48.0	13.70	20

MANUFACTURING SPECIFICATIONS

- Flexible inner conductors in tinned copper;
- Conductors insulation in TPE
- Cores colour: brown, blue
- Outer sheath in TPE - Sheath colour: black, yellow.

TECHNICAL SPECIFICATIONS

- Working temperature: -30°C / +105°C;
- Storage temperature: -40°C / +105°C;
- Field of application: AS-Interface fieldbus systems;
- Use: fixed applications.

STANDARD REFERENCE

ASI standard • EN 50295 • IEC 62026-2

STANDARD PACKAGING

Code final no.	Packaging	No. pieces	Manufacturing
1	100 m coil	5	UPON REQUEST
6	500 m reel	1	UPON REQUEST
7	1000 m reel	1	UPON REQUEST

Code	Formation no. x mm²	Copper weight kg / km	Approx. weight kg / km	Sheath Colour	Packaging	No. pieces
A87.541	2x1.50	29	55		100 m coil	5
A87.551	2x1.50	29	55		100 m coil	5

ON REQUEST: • Sheath in PUR.

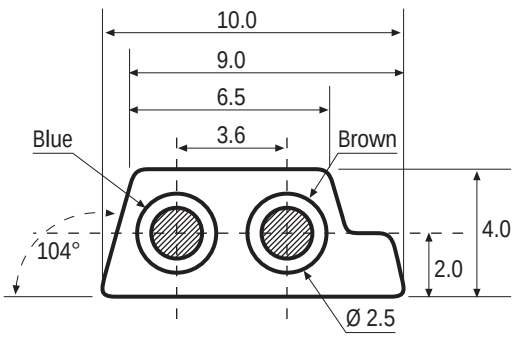

CAN-BUS

GENERAL SPECIFICATIONS

These singular or duble paired and shielded copper cables are suitable for the transmission of data from master devices to sensor and actuators in CANBUS systems (Controller Area Network). Their electrical specifications are similar to the standard EIA-RS-485. The transmission speed varies from 9.6 kbps to 1.2 Mbps based on the length of installed segments and the on cable section size. CANBUS systems are more used by textile industry, machineries production industry and on medical field.

ELECTRICAL SPECIFICATIONS

- Max. core resistance (Ohm): 87 Ohm/km (0.22 mm²) - 25 Ohm/km (0.75 mm²)
- Min. insulating resistance: 1.0 GOhm/km
- Standard impedance: 120 Ohm +/- 10%
- Mutual capacity (800 MHz): 58 nF/km
- Test core voltage: 1.5 kV
- Attenuation: 5.6 dB/100 m (10 MHz) (0.22 mm²)
  3.5 dB/100 m (10 MHz) (0.75mm²)
- Transfer impedance: <= 250 mOhm/m (10 MHz)

MANUFACTURING SPECIFICATIONS

	1x2x0.22	1x2x0.75
• Red copper conductors:	AWG24/7	AWG18/24
• Inner conductors insulation:	PE	PE
• Cores colour:	DIN 47100	DIN 47100
• Tape:	Pes	Pes
• Shield:	CuSn braid (coverage 85%)	CuSn braid (coverage 85%)
• Outer sheath:	FR PVC - Violet colour	FR PVC - Violet colour

TECHNICAL SPECIFICATIONS

- Working temperature: -40°C / +70°C;
- Field of application: fieldbus systems CAN-BUS;
- Use: fixed applications.

STANDARD REFERENCE

- ISO 11898
- DIN 47100
- CEI EN50265-2-1
- CEI 20-35/1-1

AVAILABLE PACKAGING

Code final no.	Packaging	No. pieces	Manufacturing
1	100 m coil	5	UPON REQUEST
6	500 m reel	1	UPON REQUEST
7	1000 m reel	1	UPON REQUEST

Code	Formation no x mm²	Outer nom. Ø mm	Copper weight kg/km	Approx. weight kg/km	Sheath Colour	Packaging	No. pieces
A87.501	1x2x0.22	5.40	16.70	42.00		100 m coil	5
A87.511	2x2x0.22	7.10	34.80	68.00		100 m coil	5
A87.521	1x2x0.75	8.60	54.70	108.00		100 m coil	5
A87.531	2x2x0.75	11.50	81.00	142.00		100 m coil	5



RoHS





RoHS

EIB-KONNEX

GENERAL SPECIFICATIONS

They are used for the transmission of bus signals from command devices to sensors and actuators inside residential buildings. These cables ensure perfect communication in compliance with the standard EIB KNX (European Installation Bus). They can be placed above or below plaster inside ducts or channels, as well as externally to provide protection against direct exposure to sun rays. Cabling can take place with power cables without limitations. BUS EIB can be used to control lighting, rolling shutters, heating, ventilation, etc.

ELECTRICAL SPECIFICATIONS

- Standard impedance: 100 Ohm
- Conductors resistance: 34.6 Ohm/km
- Insulation resistance: 100 MOhm/km min
- Sheath surface resistance: 1 GOhm min.
- Mutual capacity (800 Hz): 47 nF/km
- Test core voltage: 1.0 kV
- Test voltage for the cores connected together: 4,0 kV
- Attenuation: 15 dB/km (50kHz) - 95 dB/km (5 MHz)

MANUFACTURING SPECIFICATIONS

- Red copper inner conductor diam. 0.80 mm;
- Conductor insulation in LSZH or PVC;
- Core colour: 1st pair Red(+)/Black(-) 2nd pair Yellow(+)/White(-);
- Core twisting: in four;
- Polyester tape;
- Shield: Al/Pes tape (coverage 100%)
- M1 type or FR-PVC outer sheath. Sheath colour: green.

TECHNICAL SPECIFICATIONS

- Working temperature: -10°C / +70°C;
- Field of application: EIB KONNEX type BUS systems;
- Use: fixed applications.

STANDARD REFERENCE

EIB KONNEX standard • CEI EN 50265-2-1 • CEI 20-35/1-1

STANDARD PACKAGING

Code final no.	Packaging	No. pieces	Manufacturing
1	100 m coil	5	in stock
6	500 m reel	1	in stock
7	1000 m reel	1	in stock



Code	Formation no x mm²	Outer nom. Ø mm	Copper weight kg/km	Approx. weight kg/km	Sheath Colour	Packaging	No. pieces
A87.211 (1)	2x2x0.80	6.10	21	64	■■■■	100 m coil	5
A87.341 (2)	2x2x0.80	5.50	21	56	■■■■	100 m coil	5

(1) Sheath in LSZH (Low Smoke Zero Halogen) - UPON REQUEST
(2) Sheath in PVC NPI (CEI 20-22 II)

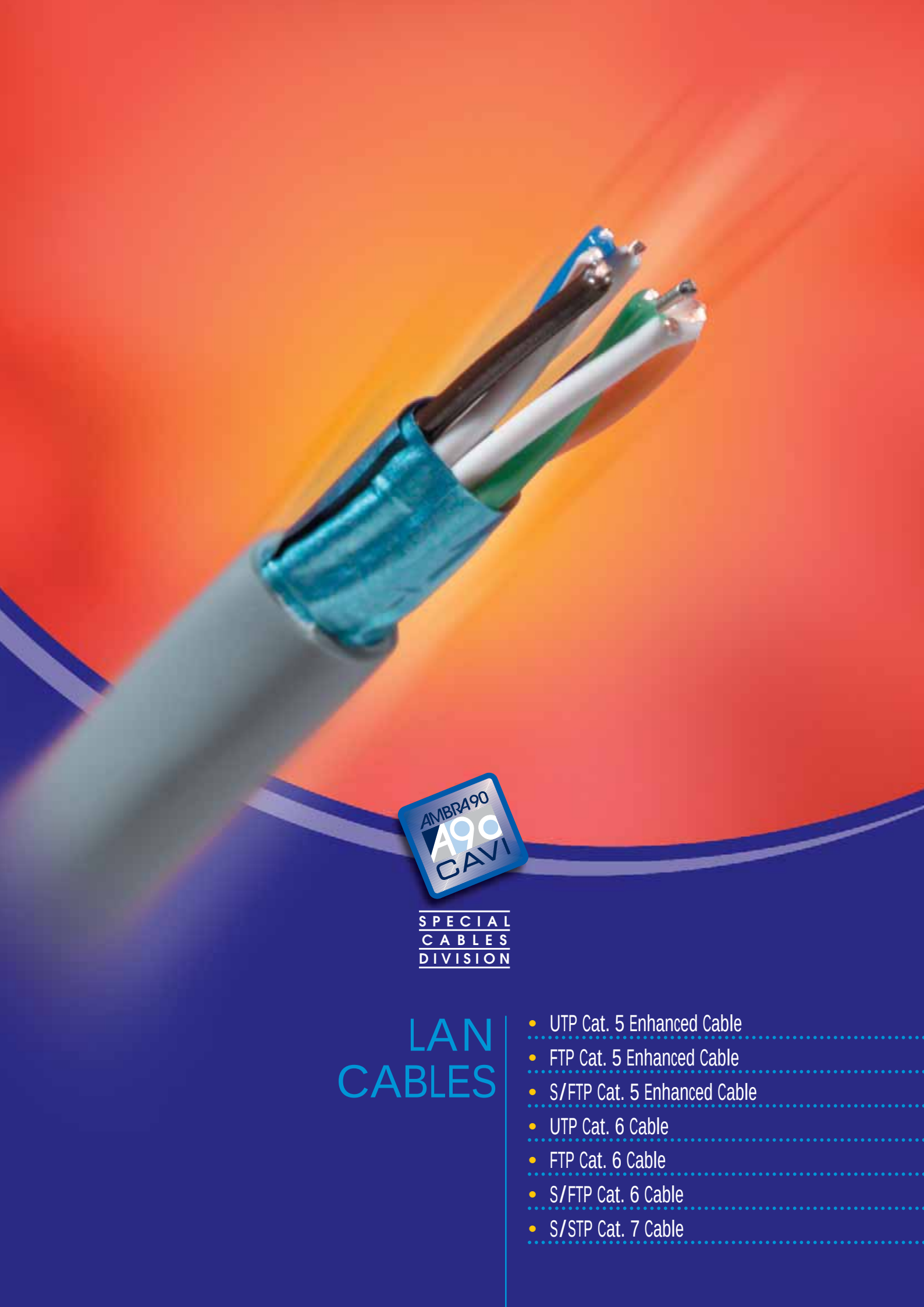

AMBRA90 A90 CAVI

SPECIAL CABLES DIVISION

LAN CABLES

- UTP Cat. 5 Enhanced Cable
- FTP Cat. 5 Enhanced Cable
- S/FTP Cat. 5 Enhanced Cable
- UTP Cat. 6 Cable
- FTP Cat. 6 Cable
- S/FTP Cat. 6 Cable
- S/STP Cat. 7 Cable

ENHANCED LAN CAT. 5 CABLES

THIRD PARTY TESTING 3P



RoHS

GENERAL SPECIFICATIONS

Cables for voice and data transmission between central and peripheral units with high speeds for frequencies up to 100 MHz for Class D applications in structured cabling systems in buildings. Characteristics have been verified up to 200 MHz.

STANDARD	FIRE PERFORMANCE	APPLICATIONS
ISO/IEC 11801-2ed	CEI 20-35, CEI 20-22 II / III	IEEE 802.3u 100 BASE T
TIA/EIA 568-A5	CEI 20-37 I, IEC 332.1, IEC 332.3	ATM (TP), ISDN, TP-DDI
EN 50173/A1		ETHERNET, 1000 BASE-T
EN 50288-3-1		GIGABIT-ETHERNET

ELECTRICAL SPECIFICATIONS

• Conductor resistance:	84.2 Ω/Km
• Max. ring resistance:	16.8 Ω/100 m at 20 °C
• Max. mutual capacity:	49 pF/ 100 m at 1 kHz
• Standard impedance:	100 ± 15 Ω from 1 MHz to 100 MHz
• Minimum bending ratio:	10 times the cable Ø
• Working temperature:	-20 ÷ +60 °C
• Max. pull:	10 Kg

MANUFACTURING SPECIFICATIONS

Description	*UTP*	*FTP*	*S/FTP*
• Inner conductor diam. mm	Cu 1x0,51 AWG24/1	Cu 1x0,51 AWG24/1	Cu 1x0,51 AWG24/1
• Insulation diam. mm	Polyolefine 1,0 mm	Polyolefine 1,0 mm	Polyolefine 1,0 mm
• Shield	*******	Al/Pes (100%)	Al/Pes (100%) + CuSn (kf=62%)
• Sheath diam. mm	PVC-FR / LSZH diam. 5,40 mm Grey (RAL 7001)	PVC-FR / LSZH diam. 6,0 mm Grey (RAL 7001)	PVC-FR / LSZH diam. 6,50 mm Grey (RAL 7001)

TRANSMISSION SPECIFICATIONS

Frequency (MHz)	Attenuation (dB/100m)	Threshold Regulation ISO/IEC 11801 2ª ed. (dB/100m)	NEXT (dB)	Threshold Regulation ISO/IEC 11801 2ª ed. (dB)	PS NEXT (dB)	Threshold Regulation ISO/IEC 11801 2ª ed. (dB)	PS EL-FEXT (dB/100m)	Threshold Regulation ISO/IEC 11801 2ª ed. (dB/100m)	ACR (dB/100m)
1.00	1.8	2.1	76	65.3	74	62.3	68	63.8	74.2
10.00	6.0	6.5	58	50.3	56	47.3	48	43.8	52.0
16.00	7.7	8.2	56	47.3	54	44.4	43	39.7	48.3
31.25	10.8	11.7	51	42.9	49	39.9	39	33.9	40.2
62.50	15.7	17.0	47	38.4	45	35.4	32	27.8	31.3
100.00	19.9	22.0	44	35.3	42	32.3	26	23.8	24.1
150.00	25.6	–	41	–	39	–	24	–	15.4
200.00	29.2	–	39	–	37	–	22	–	9.8







Code	Description	Colour	Packaging	No. pieces
A82.500	UTP Cat. 5 Enhanced 4x2xAWG 24/1 - PVC-FR		box 305 m	1
A82.550	UTP Cat. 5 Enhanced 4x2xAWG 24/1 - LSZH		box 305 m	1
A82.510	FTP Cat. 5 Enhanced 4x2xAWG 24/1 - PVC-FR		box 305 m	1
A82.560	FTP Cat. 5 Enhanced 4x2xAWG 24/1 - LSZH		box 305 m	1
A82.526	S/FTP Cat. 5 Enhanced 4x2xAWG 24/1 - PVC-FR		500 m reel	1
A82.576	S/FTP Cat. 5 Enhanced 4x2xAWG 24/1 - LSZH		500 m reel	1

Available upon request 500m and 1000m reel.

LAN CAT. 6 CABLES

THIRD PARTY TESTING 3P

GENERAL SPECIFICATIONS

Cables for voice and data transmission between central and peripheral units with high speeds for frequencies up to 200 MHz for Class E applications in structured cabling systems in buildings. Characteristics have been verified up to 300 MHz.

STANDARD	FIRE PERFORMANCE	APPLICATIONS
ISO/IEC 11801-2ed	CEI 20-35	IEEE 802.3u 100 BASE T
TIA/EIA 568-A5	CEI 20-37 I, IEC 332.1, IEC 332.3	ATM (TP), ISDN, TP-DDI
EN 50173, EN 50288-5-1		ETHERNET
EN 50288-6-1		1000 BASE-T

ELECTRICAL SPECIFICATIONS

- Conductor resistance: 84.2 Ω/Km
- Max. ring resistance: 16.8 Ω/100 m at 20 °C
- Max. mutual capacity: 48 pF/ 100 m at 1 kHz
- Standard impedance: 100 ± 15 Ω from 1 MHz to 100 MHz
- Minimum bending ratio: 10 times the cable Ø
- Working temperature: -20 ÷ +60 °C
- Max. pull: 10 Kg

MANUFACTURING SPECIFICATIONS

Description	*UTP*	*FTP*	*S/FTP*
• Inner conductor diam. mm	Cu 1x0.573 AWG23/1	Cu 1x0.573 AWG23/1	Cu 1x0.573 AWG23/1
• Insulation diam. mm	Polyolefine 1.0 mm	Polyolefine 1.0 mm	Polyolefine 1.0 mm
• Shield	*******	Al/Pes (100%)	Al/Pes (100%) + CuSn (kf=62%)
• Sheath diam. mm	PVC-FR / LSZH diam. 7.00 mm Grey (RAL 7001)	PVC-FR / LSZH diam. 7.20 mm Grey (RAL 7001)	PVC-FR / LSZH diam. 7.50 mm Grey (RAL 7001)

TRANSMISSION SPECIFICATIONS

Frequency (MHz)	Attenuation (dB/100m)	Threshold Regulation (dB/100m)	NEXT (dB)	Threshold Regulation (dB)	PS NEXT (dB)	Threshold Regulation (dB)	PS EL-FEXT (dB/100m)	Threshold Regulation (dB/100m)	ACR (dB/100m)	PS ACR (dB/100m)
1.00	1.9	2.1	52	66.0	81	64.0	84	64.8	80.1	79.1
10.00	5.9	6.0	70	59.3	68	57.3	66	44.8	64.1	62.1
16.00	7.5	7.6	66	56.2	64	54.2	63	40.7	58.5	56.5
31.25	10.4	10.7	58	51.9	57	49.9	56	34.9	47.6	46.6
62.50	14.8	15.5	56	47.4	55	45.4	48	28.9	41.2	40.2
100.00	19.3	19.9	53	44.3	49	42.3	44	24.8	33.7	29.7
150.00	24.5	25.3	48	41.4	44	39.4	44	21.0	23.5	19.5
200.00	28.0	29.2	46	39.8	42	37.8	42	18.8	18.0	14.0
250.00	31.8	33.0	44	38.3	40	36.3	40	16.8	12.2	8.2
300.00	35.5	–	40	–	38	–	38	–	4.5	2.5



RoHS

Code	Description	Colour	Packaging	No. pieces
A82.840	UTP Cat. 6 - 4x2xAWG 23/1 - PVC-FR		box 305 m	1
A82.940	UTP Cat. 6 - 4x2xAWG 23/1 - LSZH		box 305 m	1
A82.856	FTP Cat. 6 - 4x2xAWG 23/1 - PVC-FR		500 m reel	1
A82.956	FTP Cat. 6 - 4x2xAWG 23/1 - LSZH		500 m reel	1
A82.866	S/FTP Cat. 6 - 4x2xAWG 23/1 - PVC-FR		500 m reel	1
A82.966	S/FTP Cat. 6 - 4x2xAWG 23/1 - LSZH		500 m reel	1

Available upon request 500m and 1000m reel.



S/STP CAT. 7 CABLES



RoHS



GENERAL SPECIFICATIONS

4 paired, copper cable for fixed applications with 23 AWG solid copper conductors and insulated in polyolefin material. Individually paired and shielded with aluminium/polyester tape, under a tinned copper braid. Sheath in thermoplastic, flame retardant grey (RAL 7001) colour PVC compound.
Cable for voice and data transmission between central and peripheral units for frequencies up to 600MHz for Class F applications in structured cabling systems in buildings.

STANDARD	FIRE PERFORMANCE	APPLICATIONS
ISO/IEC 11801-2ed	CEI 20-35, CEI 20-37 I	IEEE 802.3u 100 BASE T
EN 50288-4-1, EN 50288-4-2	IEC 332.1, IEC 332.3	ATM (TP), ISDN, TP-DDI

ELECTRICAL SPECIFICATIONS

• Conductor resistance:	68 Ω/Km			
• Max. ring resistance:	14.8 Ω/100 m at 20 °C			
• Max. mutual capacity:	43 pF/ 100 m at 1 kHz			
• Max. capacity unbalance:	150 pF/100 m at 1 kHz			
• Standard impedance:	100 ± 15 Ω from 1 MHz to 100 MHz			
• Minimum bending ratio:	70 mm			
• Working temperature:	-20 ÷ +60 °C			
• Max. pull:	25 Kg			
• Transfer impedance:	1 MHz	10 MHz	100 MHz	
	9.5 m Ω/m	11.2 m Ω/m	6.4 m Ω/m	
• Max resistive unbalance:	2%			
• Structural return loss:	20 MHz	100 MHz	300 MHz	600 MHz
	27 dB	26 d B	25 dB	20 dB

MANUFACTURING SPECIFICATIONS

Description	Inner conductor diam. mm	Insulation diam. mm	Pair	Shield	Sheath diam. mm
S/FTP	Cu	Poliyolefine	BI / BL	Al/Pes	Grey (RAL 7001)
4 x 2 x AWG 23/1	AWG 23/1	1,4	BI / AR	each pair	8.0
	(1 x 0.573)		BI / VE	CuSn	PVC-FR / LSZH
			BI / MA	(kf = 62%)	

TRANSMISSION SPECIFICATIONS

Frequency (MHz)	Attenuation (dB/100m)	Threshold Regulation ISO/IEC 11801 2ª ed. (dB/100m)	NEXT (dB)	Threshold Regulation ISO/IEC 11801 2ª ed. (dB)	PS NEXT (dB)	ACR (dB)	PS ACR (dB/100m)
1.00	1.7	1.9	95	80.0	93	93.3	91.3
4.00	3.3	3.6	95	80.0	93	91.7	89.7
10.00	5.3	5.6	94	80.0	92	88.7	86.7
16.00	6.7	7.1	93	80.0	91	86.3	84.3
20.00	7.5	7.9	92	80.0	90	84.5	82.5
31.25	9.5	10.0	91	79.6	89	81.5	79.5
62.50	13.5	14.3	89	75.1	88	75.5	74.5
100.00	17.2	18.2	88	72.0	83	70.8	65.8
150.00	21.2	23.0	83	69.1	81	61.8	59.8
200.00	24.7	26.4	79	67.5	79	54.3	54.3
300.00	30.8	32.9	77	64.8	76	46.2	45.2
600.00	44.4	48.3	72	60.3	70	27.6	35.6

Code	Description	Colour	Packaging	No. pieces
A82.886	S/STP Cat. 7 - 4 x 2 x AWG 23/1 - sheath in PVC-FR		500 m reel	1
A82.986	S/STP Cat. 7 - 4 x 2 x AWG 23/1 - sheath in LSZH		500 m reel	1

Available upon request 1000m reel.



AMBRA 90 A90 CAVI

SPECIAL CABLES DIVISION

SUBMERSIBLE PUMP CABLES



RoHS

CE

WRAS
ACS
UBA
approved

SUBMERSIBLE PUMP CABLES

GENERAL SPECIFICATIONS

These special cables are used to power submersible pump motors. Suitable for permanent immersion in water up to 250m thanks to the particular composition of the EPR girded sheath. They are also suitable for use in drinking water (as per the Ministry for Health Circular no.102, 2/12/1978) certified by the most prestigious European laboratories on the basis of quality analyses on the drinking water following immersion of the cables. Some cables are also available with gel filled cores when the cable and motor connection occurs without the use of a connector. In this way, since the cores make contact with water or oil, you avoid the back flow of liquid due to the presence of the gel that therefore creates a barrier.

ELECTRICAL SPECIFICATIONS

Section mm²	Test voltage V	Working voltage V	Conductor electrical resistance Ω/Km	Min. insulating resistance Ω/Km	Max curent intensity A
1.50	2000	450/750	12.60	20	20
1.50 jelly	2000	450/750	13.60	20	20
2.00	2000	450/750	8.70	20	24
2.00 jelly	2000	450/750	9.20	20	24
4.00	3000	450/750	5.30	20	35
6.00	3000	450/750	3.40	20	44

MANUFACTURING SPECIFICATIONS

- Class 5. bare copper conductors. Class 2 only for the cores filled with gel;
- Conductor insulation in XLPE. Core colour in compliance with CEI-UNEL 00722;
- Sheath in thermoplastic rubber based on G8 EPR BLUE (RAL 5015) or BLACK (RAL 9011).

TECHNICAL SPECIFICATIONS

- Temperature range: -30°C ÷ +90°C;
- Storage temperature: -40°C ÷ +90°C;
- Minimun bending radius: 10 x minimum side;
- Use: mobile applications;
- Rated voltage: 450 / 750V;
- Test core voltage: 2500V.

STANDARD REFERENCE

- CEI EN 60228/VDE 0295 Cl.5 Cl.2
- CEI UNEL 00722
- CEI 20-11

Code	Formation no x mm²	Outer nom. Ø mm	Copper weigtht kg/km	Approx. weight kg/km	Sheath Colour	Packaging
A11.808-0065A	3x1.50	10.90x5.20	43.20	80		3000 m reel
A11.748-0065A	4x1.50	15.90x5.20	57.60	110		1500 m reel
A11.928-0065A	4x1.50 jelly	15.90x5.20	57.60	110		1500 m reel
A11.897-0065A	4x2.00	19.00x5.80	76.80	155		1500 m reel
A11.877-0065A	4x2.00 jelly	19.00x5.80	76.80	155		1000 m reel
A11.867-0065A	4x2.00 jelly	19.00x5.80	76.80	155		1000 m reel
A11.978-0065A	3x4.00	17.10x7.50	115.20	190		1500 m reel
A11.907-0065A	4x4.00	25.00x7.50	153.60	240		1000 m reel
A11.987-0065A	3x6.00	19.10x8.50	172.80	270		1000 m reel
A11.917-0065A	4x6.00	25.90x7.50	230.40	300		1000 m reel



AMBRA90 CAVI

SPECIAL CABLES DIVISION

AUTOMOTIVE CABLES



RoHS

TÜV approved

AUTOMOTIVE CABLES

GENERAL SPECIFICATIONS

These low voltage cables are used in the automotive field for connections between the motor and trailer of indicator lights around the perimeter and other various usage. These cables can have a special lead free PVC compound jacket or a double jacket in lead free PVC and PUR compound which gives the cables their high resistance: from UV rays, low temperatures, oil and chemical agents, lacerations, abrasions and hydrolysis. They are developed in compliance with international standards ISO 14572 and DIN/ISO 6722. ADR certification permits the use of these cables in vehicles used to transport dangerous goods.

STANDARD REFERENCE

- IEC 60228/VDE 0295 Cl.5
- CEI 20-22 II / CEI 20-37 I
- DIN/ISO 6722
- EN600079-14

ELECTRICAL SPECIFICATIONS

Section mm²	Working voltage V	Conductor electrical resistance Ω/Km	Min. insulating resistance Ω/Km
0.75	60	24.50	10
1.00	60	18.50	10
1.50	60	12.00	10
2.50	60	7.95	10
4.00	60	4.95	10
6.00	60	3.40	10

MANUFACTURING SPECIFICATIONS

- Class 5 bare copper conductors;
- Conductor insulation in lead free PVC. Data pair insulated in PE. Core colouring in compliance with ISO 4141-3;
- Sheath in a special PVC compound or double sheath in lead free PVC and PUR.

TECHNICAL SPECIFICATIONS

- Temperature range: -40°C ÷ +85°C;
- Storage temperature: -40°C ÷ +90°C;
- Minimun bending radius: 12 x minimum side;
- Use: cable for fixed applications;
- Rated voltage: ≤60V;
- Test core voltage: 1000V a.c. 3 sec.

Code	No. conductors x sez. no x mm²	Conductors Colour	Nom. outer Ø mm	Copper weight kg/km	Approx. weight kg/km	Sheath Colour	Packaging
A78.067	2x0.75 FLYY	Brown/Blue	6.30	14.40	63	■■■■	1000 m reel
A77.687	5x0.75 FLYY	Green/Red/Blue Brown/White	6.85	36.00	84	■■■■	1000 m reel
A77.667	7x0.75 FLYY	White/Blue/Brown Black/Green/Red/Yellow	7.60	50.40	109	■■■■	1000 m reel
A77.877	2x1.00 FLYY11Y	Brown/White	5.80	19.20	54	■■■■	1000 m reel
A77.887	4x1.00 FLYY	Green/Red/Blue/White	6.60	38.40	83	■■■■	1000 m reel
A77.897	6x1.00 FLYY11Y	White/Blue/Brown Green/Red/Yellow	8.35	57.60	125	■■■■	1000 m reel
A77.907	6x1.00+1x2.00 FLYY11Y	Blue/Brown/Black/Green Red/Yellow/White	9.00	76.80	147	■■■■	1000 m reel
A77.917	7x1.00+1x2.00 FLYY11Y	Blue/Brown/Black/Green Red/Yellow/Gray/White	9.00	86.40	160	■■■■	1000 m reel
A78.077	9x1.00+1x2.00 FLYY	Blue-Black/White-Black Blue/Brown/Black/Green Red/Yellow/Yellow-Black/White	12.50	105.60	258	■■■■	1000 m reel
A77.847	2x4.00+3x1.50 +1x2x1.50 FLYY11Y	Brown/Red White/Yellow/Black White-Green/White-Brown White/Orange/White-Red	13.60	148.80	306	■■■■	1000 m reel
A77.857	3x2.50+10x1.50 +1x2x1.50 FLYY11Y	Red/Green/Brown/ Yellow/Rose/Blue/Black Gray/White-Blue/White-Black White-Green/White-Brown	15.60	244.80	436	■■■■	1000 m reel
A12.017	2x1.50 FLAT FLFYY11Y	Brown/White	4.00x6.60	28.80	63	■■■■	1000 m reel

SPIRAL CABLES

GENERAL SPECIFICATIONS

These cables are low voltage used for connections between the motor and trailer of ABS/EBS braking systems equipped with connection systems ISO 12098 (15 poles), ISO 1185/3731 (7 poles – 24V) and ISO 7638 (7 poles and 5 poles). These spiral cables with a PUR or TPE-E sheath allow for greater elastic memory. These cables are manufactured to ensure their resistance to a high number of cycles, as requested by all motor manufacturers. They are developed in compliance with international standards DIN 72570, DIN/ISO 6722 and ISO 14572.

STANDARD REFERENCE

- IEC 60228/CEI 20-29/VDE 0295 Cl.2
- DIN72570, ISO 14572, DIN/ISO 6722

ELECTRICAL SPECIFICATIONS

Section mm²	Working voltage V	Conductor electrical resistance Ω/Km	Min. insulating resistance Ω/Km
1.00	60	18.50	10
1.50	60	12.00	10
2.50	60	7.95	10
4.00	60	4.95	10
6.00	60	3.40	10

MANUFACTURING SPECIFICATIONS

- Class 5 bare copper conductors;
- Conductor insulated in lead free PVC or in TPE-E. Data pair insulated in PE. Core colouring in compliance with ISO 4141-3;
- Sheath in PUR or in TPE-E.

TECHNICAL SPECIFICATIONS

- Temperature range: -40°C ÷ +85°C;
- Storage temperature: -40°C ÷ +90°C;
- Use: mobile applications;
- Rated voltage: ≤60V;
- Test core voltage: 1000V a.c. 3 sec.

Code	No. conductors x sez. no x mm²	Conductors Colour	Nom. outer Ø mm	Copper weight kg/km	Approx. weight kg/km	Sheath Colour	Packaging
A77.487	6x1.00+1x1.50 PVC/PUR	Brown/Blue/Black/Yellow Red/Green/White	10.30	72	167	■■■■	1000 m reel
A77.747	6x1.00+1x2.50 PVC/TPE-E	Brown/Blue/Black/Yellow Red/Green/White	10.00	81.60	174	■■■■	1000 m reel
A78.247	2x4.00+3x1.50 PVC/PUR	Brown/Red White/Yellow/Black	13.50	120	266	■■■■	1000 m reel
A78.257	2x4.00+3x1.50 TPE-E/TPE-E	Numbered white 1-4 Numbered white 2-3-5	12.20	120	236	■■■■	1000 m reel
A78.267	2x6.00+3x1.50 PVC/PUR	Brown/Red White/Yellow/Black	15.70	158.40	370	■■■■	1000 m reel
A78.277	2x6.00+3x1.50 TPE-E/TPE-E	Numbered white 1-4 Numbered white 2-3-5	15.70	158.40	370	■■■■	1000 m reel
A77.627	2x4.00+3x1.50 +(1x2x1.50) PVC/PUR	Brown/Red White/Yellow/Black White-Green/White-Brown	12.20	148.80	270	■■■■	1000 m reel
A78.287	2x4.00+3x1.50 +(1x2x1.50) TPE-E/TPE-E	Numbered white 1-4 Numbered white 2-3-5 White-Green/White-Brown	12.50	148.80	280	■■■■	1000 m reel
A78.297	3x2.50+10x1.50 +(1x2x1.50) TPE-E/PUR	White/Orange/White-Red Yellow/Green/Blue/Black/Brown Red/Rose/Gray/White-Black/White-Blue White-Green/White-Brown	15.20	244.80	390	■■■■	1000 m reel
A78.307	3x2.50+10x1.50 +(1x2x1.50) TPE-E/TPE-E	Numbered rose 4-9-13 Numbered white 1-2-3-5-6-7-8-10-11-12 White-Green/White-Brown	15.70	244.80	400	■■■■	1000 m reel



RoHS



Code	No. conductors x sez. no x mm²	Conductors Colour	Nom. outer Ø mm	Cable Lenght m	Working Lenght m	Sheath Colour
90.332	6x1.00 + 1x1.50 PVC / PUR	Brown / Blue / Black Yellow / Red / Green White	48	4.50	3.0	■■■■
90.336	6x1.00 + 1x2.50 PVC / TPE-E	Brown / Blue / Black Yellow / Red / Green White	48	4.50	3.0	■■■■
90.320	2x4.00 + 3x1.50 PVC / PUR	Brown / Red White / Yellow / Black	55	4.50	3.0	■■■■
90.360	2x4.00 + 3x1.50 TPE-E / TPE-E	Numbered white 1-4 Numbered white 2-3-5	55	4.50	3.0	■■■■
90.324	2x6.00 + 3x1.50 PVC / PUR	Brown / Red White / Yellow / Black	60	4.50	3.0	■■■■
90.364	2x6.00 + 3x1.50 TPE-E / TPE-E	Numbered white 1-4 Numbered white 2-3-5	60	4.50	3.0	■■■■
90.328	2x4.00 + 3x1.50 + (1x2x1.50) PVC / PUR	Brown / Red White / Yellow / Black White-Green / White-Brown	55	4.50	3.0	■■■■
90.368	2x4.00 + 3x1.50 + (1x2x1.50) TPE-E / TPE-E	Numbered white 1-4 Numbered white 2-3-5 White-Green / White-Brown	55	4.50	3.0	■■■■
90.376	3x2.50 + 10x1.50 + (1x2x1.50) TPE-E / PUR	White / Orange / White-Red Yellow / Green / Blue / Black Browm / Red / Rose / Gray / White-Black / White-Blue White-Green / White-Brown	105	4.50	3.0	■■■■



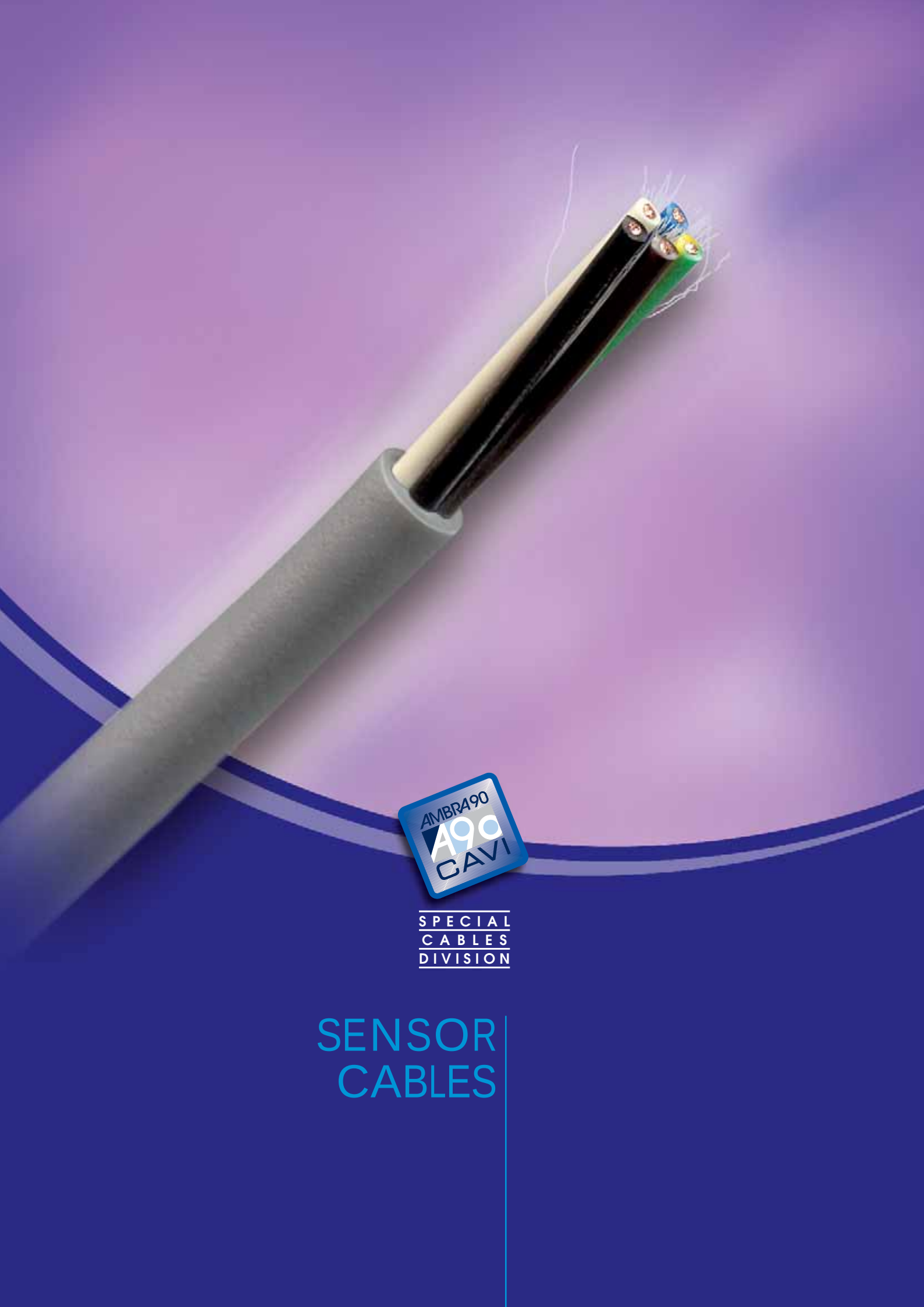

AMBRA90 A90 CAVI

SPECIAL CABLES DIVISION

SENSOR CABLES

SENSOR CABLES

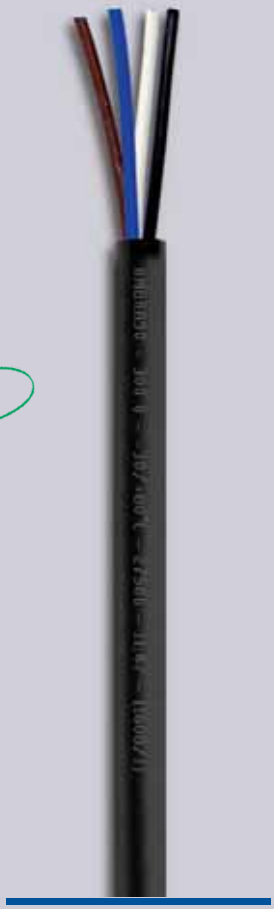

RoHS

CE

GENERAL SPECIFICATIONS

These low voltage cables are applied in capacitive, magnetic and inductive electronic sensor used in the industrial automotive field in automatic machines (for assembly, for packaging and for special processes, etc.), in photoelectric sensors for household applications, in photoelectric sensors for industrial applications, in barriers around the parameters of lifts and automatic doors, etc. These cables have a special lead free PVC compound or a PUR sheath that gives higher resistance: from UV rays, low temperatures, oil and chemical agents, lacerations, abrasions and hydrolysis. They are developed in compliance with the main international standards.

STANDARD REFERENCE

- IEC 60228 / VDE 0295 Cl.5 Cl.6
- CEI 20-22 II / CEI 20-37 I

ELECTRICAL SPECIFICATIONS

Section mm²	Test voltage V	Working voltage V	Conductor electrical resistance Ω/Km	Min. insulating resistance Ω/Km
0.14	2000	250	136.00	20
0.25	2000	250	78.00	20
0.34	2000	250	52.20	20
0.50	2000	250	39.00	20
0.75	2000	250	26.00	20

MANUFACTURING SPECIFICATIONS

- Class 5 or class 6 bare copper conductors;
- Conductor insulation in lead free PVC;
- Sheath in a special lead free PVC compound or in PUR.

TECHNICAL SPECIFICATIONS

- Temperature range: -40°C ÷ +85°C;
- Storage temperature: -40°C ÷ +90°C;
- Minimun bending radius: 12 x cable diameter;
- Use: cable for fixed applications;
- Rated voltage: 250V;
- Test core voltage: 2000V



Code	No. conductors x sez. no x mm²	Conductors Colour	Nom. outer Ø mm	Copper weight kg / km	Approx. weight kg / km	Sheath Colour	Packaging
A77.497	2x0.14 JE-YY Oil resistant	Brown / Blue	2.75	2.70	10.30		1000 m reel
A77.507	3x0.14 JE-YY Oil resistant	Blue / Brown / Black	2.75	4.05	11.40		1000 m reel
A78.047	3x0.14 JE-Y11Y Matt	Blue / Brown / Black	2.75	4.05	11.00		1000 m reel
A77.517	3x0.25 JE-YY Oil resistant	Blue / Brown / Black	3.50	7.20	19.50		1000 m reel
A77.787	3x0.25 JE-9Y11Y Oil resistant - Matt	Blue / Brown / Black	4.10	7.20	21.00		1000 m reel
A77.527	4x0.25 JE-YY Oil resistant	Blue / Brown Black / White	4.20	9.60	27.00		1000 m reel
A77.797	4x0.25 JE-9Y11Y Oil resistant - Matt	Blue / Brown Black / White	4.50	9.60	26.00		1000 m reel
A78.177	5x0.25 JE-YY Oil resistant	Gray / Blue / Brown Black / White	4.50	12.00	30.00		1000 m reel
A77.567	3x0.34 JE-YY Oil resistant	Blue / Brown / Black	4.30	9.80	29.50		1000 m reel
A77.577	4x0.34 JE-YY Oil resistant	Blue / Brown Black / White	4.60	13.60	35.60		1000 m reel
A77.927	5x0.34 JE-Y11Y Oil resistant - Matt	Blue / Brown / Black White / Yellow-Green	6.00	16.30	46.00		1000 m reel
A11.847	2x0.50 JE-YY	Brown / Blue	4.90	9.60	34.70		1000 m reel
A11.767	2x0.50 JE-YY	Brown / Blue	4.90	9.60	34.70		1000 m reel
A78.237	2x0.50 JE-Y11Y	Brown / Blue	5.00	9.60	32.00		1000 m reel
A77.957	3x0.50 JE-YY Oil resistant	Blue / Brown Yellow-Green	5.10	14.40	42.00		1000 m reel

AWG / METRIC CONVERSION TABLE

AWG	STRAND WIRES		CONDUCTOR	
	no. wires	single-wire Ø (mm)	Strand Ø	Total sec. (mm²)
10/1	1	2.6	2.6	5.26
10/37	37	0.41	2.8	4.74
10/105	105	0.25	3.2	5.32
12/1	1	2.05	2.05	3.31
12/19	19	0.46	2.3	3.08
12/65	65	0.25	2.3	3.29
14/1	1	1.6	1.6	2.08
14/19	19	0.36	1.8	1.94
14/41	41	0.25	1.96	2.08
16/1	1	1.29	1.29	1.31
16/7	7	0.51	1.52	1.44
16/19	19	0.29	1.5	1.32
18/1	1	1.02	1.02	0.82
18/7	7	0.41	1.22	0.89
18/19	19	0.25	1.27	0.96
20/1	1	0.81	0.81	0.52
20/7	7	0.32	0.96	0.56
20/19	19	0.20	1.02	0.61
22/1	1	0.64	0.64	0.324
22/7	7	0.25	0.76	0.35
22/19	19	0.16	0.78	0.38
24/1	1	0.51	0.51	0.205
24/7	7	0.203	0.61	0.227
24/19	19	0.127	0.64	0.241
26/1	1	0.405	0.405	0.128
26/7	7	0.160	0.483	0.141
26/19	19	0.102	0.533	0.154
28/1	1	0.320	0.320	0.081
28/7	7	0.127	0.381	0.089
28/19	19	0.080	0.406	0.092
30/1	1	0.254	0.254	0.051
30/7	7	0.102	0.305	0.057
32/1	1	0.203	0.203	0.032
32/7	7	0.080	0.234	0.034
34/1	1	0.160	0.160	0.020
34/7	7	0.065	0.195	0.022
36/1	1	0.125	0.125	0.012
36/7	7	0.050	0.150	0.014
38/1	1	0.100	0.100	0.008
40/1	1	0.080	0.080	0.0048
42/1	1	0.065	0.065	0.0030
44/1	1	0.050	0.050	0.0020

CONDUCTORS FOR INSULATING CABLES (IEC 60228)

CLASS 1

■ SINGLE WIRE CONDUCTORS FOR UNIPOLAR AND MULTIPOLAR CABLES

1	2	3	4
Nominal section mm²	MAXIMUM RESISTANCE OF CONDUCTOR AT 20°C		
	Circular copper conductors		Aluminium conductors with circular or sectoral sections (Ohm/Km)
	Bare (Ohm/Km)	Coated (Ohm/Km)	
0.5	36.0	36.7	–
0.75	24.5	24.8	–
1	18.1	18.2	–
1.5	12.1	12.2	18.10 (2)
2.5	7.41	7.56	12.10 (2)
4	4.61	4.70	7.41 (2)
6	3.08	3.11	4.61 (2)
10	1.83	1.84	3.08 (2)
16	1.15	1.16	1.91 (2)
25	0.727 (1)	–	1.20
35	0.524 (1)	–	0.868
50	0.387 (1)	–	0.641
70	0.268 (1)	–	0.443
95	0.193 (1)	–	0.320
120	0.153 (1)	–	0.253
150	0.124 (1)	–	0.206
185	–	–	0.164
240	–	–	0.125
300	–	–	0.100

(1) See 4.1.2.

(2) Al conductors from 1.50 to 16 mm²; only circular section. See 4.1.3.

CONDUCTORS FOR INSULATING CABLES (IEC 60228)

CLASS 2

■ CORD CONDUCTORS FOR UNIPOLAR AND MULTIPOLAR CABLES

1	2	3	4	5	6	7	8	9	10
Nominal section mm²	Minimum number of conductor wires						Max resistance of conductors at 20°C		
	Circular conductors Compact		Circular conductors No compact		Conduttore settorale		Copper conductors		Aluminium conductor (Ohm/km)
							Bare wire (Ohm/km)	Coated wire (Ohm/km)	
	Cu	Al	Cu	Al	Cu	Al			
0.5	7	–	–	–	–	–	36.0	36.7	–
0.75	7	–	–	–	–	–	24.5	24.8	–
1	7	–	–	–	–	–	18.1	18.2	–
1.5	7	–	6	–	–	–	12.1	12.2	–
2.5	7	–	6	–	–	–	7.41	7.56	–
4	7	7 (2)	6	–	–	–	4.61	4.70	7.41
6	7	7 (2)	6	–	–	–	3.08	3.11	4.61
10	7	7	6	–	–	–	1.83	1.84	3.08
16	7	7	6	6	–	–	1.15	1.16	1.91
25	7	7	6	6	6	6	0.727	0.734	1.20
35	7	7	6	6	6	6	0.524	0.529	0.868
50	19	19	6	6	6	6	0.387	0.391	0.641
70	19	19	12	12	12	12	0.268	0.270	0.443
95	19	19	15	15	15	15	0.193	0.195	0.320
120	37	37	18	15	18	15	0.153	0.154	0.253
150	37	37	18	15	18	15	0.124	0.126	0.206
185	37	37	30	30	30	30	0.0991	0.100	0.164
240	61	61	34	30	34	30	0.0754	0.0762	0.125
300	61	61	34	30	34	30	0.0601	0.0607	0.100
400	61	61	53	53	53	53	0.0470	0.0475	0.0778
500	61	61	53	53	53	53	0.0366	0.0369	0.0605
630	91	91	53	53	53	53	0.0283	0.0286	0.0469
800	91	91	53	53	–	–	0.0221	0.0224	0.0367
1000	91	91	53	53	–	–	0.0176	0.0177	0.0291
1200	(1)	(1)	(1)	(1)	–	–	0.0151	0.0151	0.0247
(1400) (3)	(1)	(1)	(1)	(1)	–	–	0.0129	0.0129	0.0212
1600	(1)	(1)	(1)	(1)	–	–	0.0113	0.0113	0.0186
(1600) (3)	(1)	(1)	(1)	(1)	–	–	0.0101	0.0101	0.0165
2000	(1)	(1)	(1)	(1)	–	–	0.0090	0.0090	0.0149

(1) The minimum number of conductor wires in not prescribed.

(2) See 4.2.1.

(3) The sections indicated in brackets are not preferential.

CONDUCTORS FOR INSULATING CABLES (CEI 20-29 - IEC 60228)

CLASS 5

FLEXIBLE COPPER CONDUCTORS FOR UNIPOLAR AND MULTIPOLAR CABLES

1	2	3	4
Nominal section mm²	Maximum wire diameter mm	Max resistance conductor at 20°C	
		Bare wire (Ohm/km)	Coated wire (Ohm/km)
0.5	0.21	39.0	40.1
0.75	0.21	26.0	26.7
1	0.21	19.5	20.0
1.5	0.26	13.3	13.7
2.5	0.26	7.98	8.21
4	0.31	4.95	5.09
6	0.31	3.30	3.39
10	0.41	1.91	1.95
16	0.41	1.21	1.24
25	0.41	0.780	0.795
35	0.41	0.554	0.565
50	0.41	0.386	0.393
70	0.51	0.272	0.277
95	0.51	0.206	0.210
120	0.51	0.161	0.164
150	0.51	0.129	0.132
185	0.51	0.106	0.108
240	0.51	0.0801	0.0817
300	0.51	0.0641	0.0495
400	0.61	0.0486	0.0654
630	0.61	0.0287	0.0292

CLASS 6

FLEXIBLE COPPER CONDUCTORS FOR UNIPOLAR AND MULTIPOLAR CABLES

1	2	3	4
Nominal section mm²	Maximum wire diameter mm	Max resistance conductor at 20°C	
		Bare wire (Ohm/km)	Coated wire (Ohm/km)
0.5	0.16	39.0	40.1
0.75	0.16	26.0	26.7
1	0.16	19.5	20.0
1.5	0.16	13.3	13.7
2.5	0.16	7.98	8.21
4	0.16	4.95	5.09
6	0.21	3.30	3.39
10	0.21	1.91	1.95
16	0.21	1.21	1.24
25	0.21	0.780	0.795
35	0.21	0.554	0.565
50	0.31	0.386	0.393
70	0.31	0.272	0.277
95	0.31	0.206	0.210
120	0.31	0.161	0.164
150	0.31	0.129	0.132
185	0.41	0.106	0.108
240	0.41	0.0801	0.0817
300	0.11	0.0641	0.0654

REEL

CAPACITY OF REEL (m)

Wire Ø (mm)	IMB005	IMB002	IMB003	IMB004	IMB006	IMB001	IMB011	IMB018
4	600	1500	2800	4300	7300	12000	29500	21000
5	350	950	1800	2700	4700	7700	18900	13500
6	250	650	1200	1900	3200	5300	13000	9400
7		500	900	1400	2400	3900	9600	6900
8		350	700	1000	1800	3000	7300	5200
9		300	550	840	1400	2300	5800	4100
10			440	680	1100	1900	4700	3300
11			350	550	950	1500	3800	2700
12			300	470	800	1300	3200	2300
13			250	400	680	1100	2700	1900
14				340	590	950	2400	1700
15				300	500	850	2050	1400

DIMENSION OF REEL

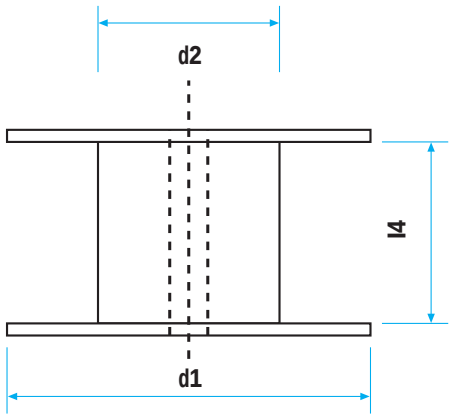

CODE	d1 (mm)	d2 (mm)	l4 (mm)
IMB005	400	160	100
IMB002	400	160	260
IMB003	500	200	300
IMB004	600	200	300
IMB006	700	315	420
IMB001	800	315	500
IMB018	1000	450	590
IMB011	1200	630	630

X - Performance

CUSTOM CABLES

Cables to meet your needs









The whole experience, know-how and the organisational abilities of the AMBRA90 brand are at your service for the development of special products. On request, we can study, design and manufacture cables for any purpose. AMBRA90 has been certified for Uni En Iso 9001:2000 by CSQ.



AMBRA90 A90 CAVI

SPECIAL CABLES DIVISION

X - Performance

CUSTOMISED CABLE REQUEST FORM

Please send a copy by fax to
++39 049/95.97.976

Date.....

Company.....

Company ref. no.....

Cable name:.....

TYPE OF CABLE
☐ Coax ☐ Lan ☐ Multipolar ☐ Telephone ☐ Audio ☐ Other.....
No. conductors or pairs:..... Nominal section:.....
Working voltage:.....

CONDUCTORS
☐ Red ☐ Tinned ☐ Steel Copper ☐ Other:.....
Type of conductor: ☐ Single-wire ☐ Multi-wire ☐ Strand

INSULATION
☐ PVC ☐ PP ☐ LSZH ☐ Other:.....
Insulation colour: ☐ One colour ☐ Two-colour ☐ Ringed ☐ Numbered
☐ Other:.....

TWISTED CONDUCTORS
☐ Yes ☐ No

SHIELDING PAIRS
☐ Al/Pes tape ☐ Al/Pes/Al tape ☐ Braid ☐ Other:.....
Type: ☐ Cu ☐ CuSn ☐ Other:.....

DRAIN WIRE
☐ Yes ☐ No

PES TAPE AFTER JOINING
☐ Yes ☐ No

FULL SHIELDING
☐ Al/Pes tape ☐ Al/Pes/Al tape ☐ Braid ☐ Other:.....
Type: ☐ Cu ☐ CuSn ☐ Other:.....

STRIPPING WIRE
☐ Yes ☐ No

OUTER SHEATH
☐ PVC ☐ LSZH ☐ PE ☐ PUR ☐ Other:.....

SHEATH COLOUR
..... **Sheath features:** ☐ Shiny ☐ Matt ☐ Other:.....

TYPE OF LAYING
☐ Inner ☐ Outer ☐ Mobile

Special requests, if any (resistance, capacity, impedance, inductance).....

Compliance to special regulations, if any .....

Packaging, Labelling, Branding.....

If feasibile, please annex a sample of the cable (min. 50 cm)

FANTON
CABLES AND ELECTRICAL COMPONENTS

The **power** of innovation

A success story of over 50 years

Since the 1950's, when Mario Fanton was at the helm of the company, the history of Fanton has been characterised by a wealth of accomplishments. The company was re-launched in 1975 when Mario's son, Renzo, turned it into a joint-stock company.
It is the latter who set the foundations for the establishment of a successful brand that is acknowledged and appreciated by consumers for the exceptional functionality, endurance and quality of its products.











Turning ideas into finished products

All successful products are the result of an idea and a subsequent rigorous and accurate project and design process. These phases are monitored by Fanton Spa, that is proud of its internal Resource & Development department and all the production cycle.

Quality and safety

These two issues underlie all that happens in the company.
Each product is the result of careful analysis in terms of design and is subject to a number of tests that assess its quality and safety, even exceeding the standards required by law.



Company

Fanton Spa
is located in an area
of 30,000 sqm, 20,000
of which are covered.
It relies on the
professionalism
and expertise
of its carefully selected
personnel that
includes 150
internal staff.



FME
FABBRICA MATERIALE ELETTRICO

FANTONET
CABLING SYSTEM

AMBRA 90
A90 CAVI
DIVISIONE CAVI SPECIALI

Innovation

The research for novelty and the constant update of its knowledge are features that set Fanton Spa aside within the development of the market, anticipating the requirements of its numerous users.

Commercial network

The FME, AMBRA 90 and FANTONET brands have been developed alongside a network of extremely competent agents, thereby establishing a consolidated presence throughout Italy, Europe, South America and Northern Africa with sales strategies to suit the size of the market.

Automated warehouse

Bearing witness to Fanton Spa's vocation for advancement, the new warehouse, a latest-generation technological jewel, prioritises customer service, providing rapid sorting of orders and goods turnover.

The power of service...







Call Center
+39.049.9597911

Our call centre is always on hand to provide an answer for your each and every need, with courtesy and professionalism.
Available Mondays to Fridays during office opening hours.

Visit our website
www.fanton.com

On the website you will find all our catalogues and related price lists that can be directly downloaded onto your computer in Acrobat Pdf format.
The website also provides a database that can be used to quickly search the product you need, or to find information on the company and all the contacts of our sales network.
Using a previously filled in form you can request our catalogues directly on line or request any other information.

Full set of catalogues
CD ROM

The whole series of the FANTON catalogues, broken down by type of product, in just one CD Rom.
A practical tool which is also easy to consult, thanks to an index that is broken down by type of product and that enables you to digit the required link directly on the required page.
How to get it? Easy: Access our website www.fanton.com or contact our Call Centre.



The quality of our products
mirrors the professionalism
of the company,
that has been awarded the UNI EN ISO 9001: 2000
certification by CSQ.

...to products

Fanton Spa is able to offer you a vast array of products, ranging from electrical materials, to special cables and structured cabling. This edition introduces a host of novelties that bear witness to the ongoing amelioration policy that has led the company to suggest new solutions to suit a constantly developing market.







Electrical Material
FME Catalogue

FME is Fanton SpA's historical brand. Heartened by our long-standing experience and know-how that has been gained over many years in the market, we are proud to present our new and remarkably enlarged catalogue. It includes numerous novelties, ranging from products for use in the home to those for industrial use. Realised in an A4 format to make it easy to file, the catalogue provides a wealth of images and charts that clearly explain the products and their variations. It is made up of two sections: the first includes all the electrical material for industrial purposes, whereas the second section is dedicated to material for civilian use.

INDUSTRIAL range of products: Plugs and Sockets, Cable Reels, Extensions, General-purpose «Golia Empty» Reels, Spare Parts for Cable reels, Distribution boards, Illumination.
HOUSEHOLD range: Multi-outlet Sockets, Plugs and Sockets, Cable reels, Self-winding Reels, Extensions, Self-service cables, Telephone and TV Accessories, Satv Accessories, TV Material, Illumination range.

Structured cabling
FANTONET Catalogue

This is the fourth edition of the FANTONet catalogue that aims at providing all the products needed to build and install a quality structured cabling system. It provides a vast choice and includes installation products, accessories for the worksite and tools.
The purpose of the catalogue is to provide the opportunity to implement a system to suit the customer's needs.
Apart from the products, the catalogue includes technical guides that provide answers to the most frequently asked questions made by installers in reference to legislation and laying methods.

Products in the catalogue: Concept System, Lan Cables, Fibre Optic Cables, «Greenet» Cabinets and Boards, Kit-Net, Cabinet accessories, Worksite accessories, Phone System, Data System 5e, Data System 6, Light System, Get Net Active Components, C Net Active Components, Generators, Tools.

Special cables
AMBRA 90 Catalogue

The Ambra 90 catalogue suggests a wide range of special cables, and the new 2004 edition includes several novelties, including digital terrestrial Coax cables, cables for electronics, fire alarm and Superflex cables. Ambra 90 resorts to the most advanced production technologies. With the aim of providing and answer to the increasingly dynamic market requirements, the catalogue also offers the opportunity to order custom-made cables. Each cable shown in the catalogue is flanked by a photo of the item, a chart providing technical features and packaging options for marketing.

Products in the catalogue: DigiSatv, Rg Cables, Lan Cables, Telecommunications Cables, Burglar Alarm and Alarm Cables, Fire Alarm Cables, Hi-Fi Cables, Extraflexible Cables, Superflexible Cables, Multipolar Shielded Copper Braid Cables, Data Transmission Cables, Cables for Electronics, Profibus Cables and Custom Cables.

FANTON Spa shall have the right to modify and/or improve the products shown in this catalogue, compliant to the laws in force at any time and with no prior warning.

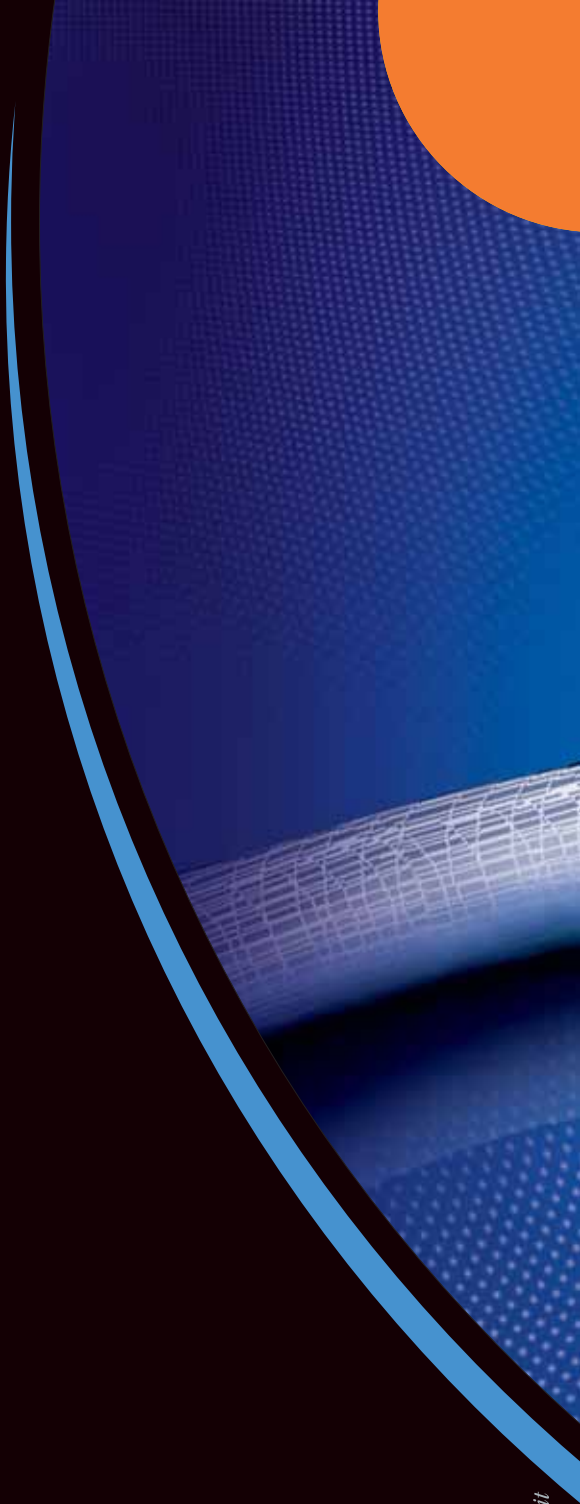

ISO 9001:2000
Certif. 9105.AMBR

Customer service
+39 049.9597951

export@fanton.com

www.proget.it

FABBRICA MATERIALE ELETTRICO

CABLING SYSTEM

DIVISIONE CAVI SPECIALI

FANTON s.p.a.

Viale dell'Industria, 8/10 • 35026 CONSELVE (Padova) ITALY • tel. +39 049 / 95.97.911 • fax +39 049 / 95.97.976

• www.fanton.com • e-mail: export@fanton.com

X0307